HUTT VALLEY DISTRICT HEALTH BOARD

HERETAUNGA BUILDING, HUTT HOSPITAL

TECHNICAL REPORTS (as at 13 May 2022)

The decision to take a precautionary approach and relocate services from the Heretaunga building at Hutt Hospital was supported by a range of expert advice. This bundle of documents contains the technical advice as at 13 May 2022.

Timeline

August 2021: A Detailed Seismic Assessment of the Heretaunga building was commissioned and carried out as part of a wider assessment of DHB facilities.

8 March 2022: The draft DSA report was issued to the DHB. The draft assessment gave the Heretaunga building a 15%NBS (IL3) rating, which means it would be considered earthquake-prone under law. As a hospital, the building is recognised to be of level 3 importance, which means it is held to a higher standard than other buildings.

- In simple terms, the building lacks some of the configuration and detailing of more modern structures that better enable them to resist and still perform after major earthquake shaking.
- Seismic ratings are essentially a risk comparator, and relate a building to an equivalent new building. **NBS does not predict expected performance in a particular earthquake**, as every earthquake is different in terms of location and depth of the epicentre, and frequency of shaking.
- More importantly, %NBS ratings don't represent a specific assessment of safety. **A building with a seismic rating less than 34%NBS is not considered a dangerous building** or necessarily in any imminent risk of failure in an earthquake.

23 March 2022: The DHB commissioned a peer review of the draft DSA by the engineering firm Silvester Clark. The draft high level peer review comments are included in this bundle of documents – see index document 3 and 5)

29 March 2022: The DHB received a summary of the draft Detailed Seismic Assessment from Aurecon (refer index document 2)

9 May 2022: The DHB received a seismic risk review from Chartered Professional Engineer, Mr Dave Brunsdon commissioned by Ministry of Health and interim Health New Zealand.

13 May 2022: The Hutt Valley DHB Board decided to vacate the Heretaunga building at Hutt Hospital to the maximum extent practicable and as soon as reasonably practicable.

The final peer review and the final Detailed Seismic Assessment will be made publicly available in due course.

Next steps:

The DHB will be working closely with our regional DHB partners and key stakeholders to examine options and next steps, and to develop an implementation plan to relocate services while ensuring continuity of, and access to, healthcare.

The DHB will also consult and engage with staff and providers. A key focus is to ensure that the Hutt Valley community continues to have access to quality, safe and equitable health care.

Further information

More information and regular updates are available on DHB websites:

Press release: https://www.ccdhb.org.nz/news-publications/news-and-media-releases/2022-05-17-hutt-valley-dhb-plans-future-transition-of-services-from-heretaunga-block/

FAQ: https://www.huttvalleydhb.org.nz/media-and-latest-news/update-on-heretaunga-block/

INDEX

Hutt Hospital – Detailed Seismic Assessments

Heretaunga Block DSA

Hutt Valley District Health Board (HVDHB)

Reference: 520602

Revision: 0

2022-02-15

Document control record

Document prepared by:

Aurecon New Zealand Limited
Spark Central
Level 8, 42-52 Willis Street
Wellington 6011
PO Box 1591
Wellington 6140
New Zealand

T +64 4 472 9589
F +64 4 472 9922
E wellington@aurecongroup.com
W aurecongroup.com

Document control						
Report title		Heretaunga Block DSA				
Document code		REP-ST-01	Project number		520602	
File path		242702 - Hutt Hospital Engineering Works - 5 Deliver Design\2021 Detailed Seismic Assessments\02 Heretaunga Block				
Client		Hutt Valley District Health Board (HVDHB)				
Client contact		Darrell Chin	Client reference			
Rev	**Date**	**Revision details/status**	**Author**	**Reviewer**	**Verifier** (if required)	**Approver**
0	2022-03-08	Draft Issue	M Yousef-beik	[redacted] s 9(2)(a) OIA	[redacted]	S Jones
Current revision		**0**				

Approval			
Author signature	Mohamad	Approver signature	
Name	Mohamad Yousef-beik	Name	Sam Jones
Title	Structural Engineer	Title	Principal

Contents

Figures

Tables

1 Executive Summary

1.1 Summary Table

Aurecon has been engaged by the Hutt Valley District Health Board (HVDHB) to provide a Detailed Seismic Assessment (DSA) of the Heretaunga Block building located at Hutt Hospital, Lower Hutt. The DSA was undertaken in accordance with *The Seismic Assessment of Existing Buildings – Technical Guidelines for Engineering Assessments,* dated July 2017 (the Guidelines), including the updated *Section C5 – Concrete Buildings – Proposed Revision to the Engineering Assessment Guidelines*, dated November 2018.

The Heretaunga Block is a seven-storey building with a basement level below ground floor and 2 plant levels above the roof level. It was designed in the mid-1970s with the construction completed in 1980. The basement and ground levels extend outside the main rectangular footprint of the building which rises as a tower above the level 1 slab. The primary structural system comprises the following components:

- Reinforced concrete piles, pile caps and ground beams.
- Reinforced concrete shear walls as the vertical primary lateral load resisting system in the transverse direction.
- Reinforced concrete beams and columns in the perimeter frames as the primary vertical lateral load resisting system in the longitudinal direction
- Reinforced concrete flat slabs act as the horizontal diaphragm.
- Reinforced concrete columns and flat slabs as the primary gravity load resisting system
- The table below presents a summary of the assessment info and findings.

A DSA was previously undertaken for the Heretaunga Block in 2011, by Aurecon, to the then current guideline at the time – 2006 NZSEE Assessment guidelines. The 2011 DSA focussed on the primary structure of the building and determined that the building had a rating of 43*%NBS*(IL3). The assessment was governed by the failure of the columns in the longitudinal frames. The 2011 DSA did not include a review of the precast cladding elements, was based upon an available ductility (μ) of 2.0, and used the provisions of a FEMA (The US Federal Emergency Management Authority) publication, FEMA 440, to increase the amount of damping in the building response to account for soil behaviour beneath the structure.

This assessment was required to consider a lower available ductility of 1.25, based on the updated guidelines and analysis techniques. Furthermore, we also note that the FEMA 440 document has since been withdrawn and was not used for this assessment, although the flexibility of the soil has been considered.

Table 1: Detailed Seismic Assessment Summary Table

Building	Heretaunga Block
Storeys:	7 story (plus two plant stories)
Year of Design (approx.)	1980
Gross Floor Area (m^2)	ground floor ~3800 m^2 1st ~3300 m^2, 2nd -7th ~ 2150 m^2 Plant 1,2 ~ 550 m^2
Construction Type	Reinforced Concrete
Assessment Type	Detailed Seismic Assessment (DSA)
Date Building Walkaround	23 October 2020
Importance Level	IL3
Structural Assessment Summary	Force-based assessment methodology as described in The Seismic Assessment of Existing Buildings, Part C2 (2017) and adopting concrete guidance from Part C5 Technical Proposal (2018).
Current *%NBS* estimate	**15*%NBS*(IL3)** based on the rating of precast concrete façade panels, stairs, concrete floor diaphragms, foundation and Moment Resisting Frames (columns and beams in the longitudinal direction).

2 Introduction

2.1 Background and Building Description

The Heretaunga Block is a seven-storey building with a basement level below the ground floor and 2 plant levels above the roof level located in Hutt Hospital, 638 High Street, Boulcott, Lower Hutt 5010, New Zealand. It was designed in the mid-1970s with construction completed in 1980. The basement and ground levels extend outside the main rectangular footprint of the building which rises as a tower above the level 1 slab. The image below is from a three-dimensional model of the building created in the drawing package "Revit" which has been used to clarify the structural system.

The building is constructed in cast in-situ reinforced concrete with precast concrete cladding panels fixed to the exterior of the building. The floors of the building are reinforced concrete "flat" slabs (without beams) with thickenings (column capitals) over the internal gravity columns.

The floors are supported on a series of square and rectangular concrete columns with shear walls running full height of the building in the transverse direction evenly spread along the building and around the lift core. In the longitudinal direction there are deep reinforced concrete spandrel beams forming moment frames with the exterior tower columns and reinforced concrete shear walls from level 1 to the foundations.

The building is founded upon reinforced concrete pile foundations, with several piles grouped together by pile caps, and the pile caps linked by ground beams.

Seismic resistance in the transverse direction is provided by the full height shear walls and in the longitudinal direction the seismic resistance is provided by the shear walls below level 1 and reinforced concrete moment frames above the level 1.

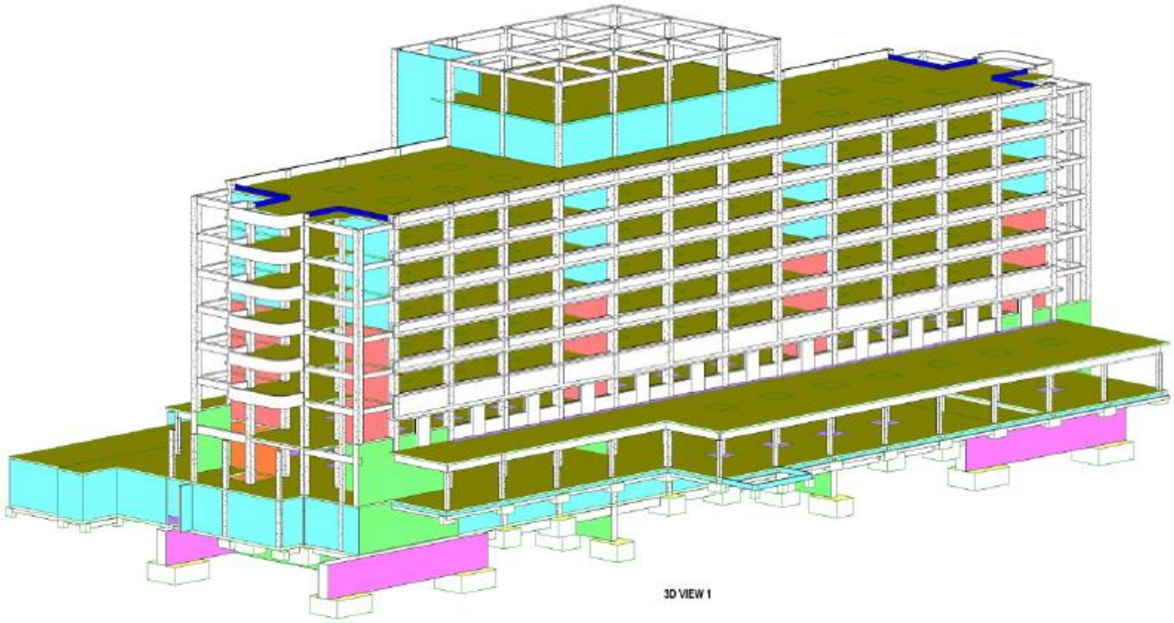

Figure 1: 3D Representation of building

2.2 Reference Information

The assessment of the building was based on the following information:

Existing Structural Drawings (1972 foundation, 1974 super structure) by Edwards, Clendon and Partners

Geotechnical desktop studies based on limited available information (2.8).

2.3 Basis of Assessment

The DSA was carried out to the latest version of the assessment guidelines (*The Seismic Assessment of Existing Buildings, 2017*) incorporating all updates included in the update to section C5 issued on 31 November 2018; this will be referred to as "Assessment Guidelines" hereafter. Loading inputs were taken from the current New Zealand loadings standard (NZS1170). The building layout, member sizes and structural details were taken from the original design drawings whilst the material grades are assumed based on the available information on the drawings and the Assessment Guidelines' recommendations.

The assessment of the primary Lateral Load Resisting Systems (LLRS) was carried out using a Response Spectrum Analysis (RSA) approach. Due to the large difference in the lateral stiffness of the load resisting system in the longitudinal direction, the equivalent static analysis (ESA) approach was not utilised for assessment.

The diaphragms were assessed using the pESA (pseudo equivalent static analysis) method.

The precast concrete cladding panels and concrete stairs (secondary structural elements) were assessed for their ability to satisfy the life safety requirements during an Ultimate Limit State (ULS) event.

The soil flexibility of the site was taken into consideration in the analysis model. However, it should be emphasized that the soil parameters considered were based on limited available geotechnical information. Noting the available geotechnical information was generally from adjacent sites and not directly relevant to the soil underneath the Heretaunga Block.

The key structural elements in this assessment included the following:

- Concrete shear walls
- Moment Resisting frame
- Gravity columns
- Concrete floor diaphragm
- Foundation system
- Precast concrete panels and connections
- Stairs

This assessment has not considered the seismic performance of building services and architectural elements (such as ceilings and partitions) within the building. We would recommend that an assessment of these elements is undertaken to get an understanding to the entire buildings performance.

2.4 Assessed Seismic Risk

The DSA results indicate that the building achieves a **15*%NBS*(IL3)** rating. The structure rating is limited by different elements including concrete floor diaphragms, moment resisting frames (columns and beams in the longitudinal direction), precast concrete façade panels and stairs. This corresponds to an overall building grade of **E** to the NZSEE rating system. A grade **E** building imposes a risk **25 times greater** than a new building. Details of the *%NBS* scores are provided in Table 6.

Under the current New Zealand Earthquake Prone Building (EPB) Methodology, a building rated at less than 33*%NBS* would be rated as **Earthquake Prone** subject to the consideration of the local Territorial Authority. However, the concrete section of the guidelines (Part C5) was revised in 2018 and has not been gazetted and so may not be used to define a building as earthquake prone.

The building has five components which have been rated as 15*%NBS*(IL3) as below:

- Columns part of moment-resisting frame ratings based on 2018 update to Part C5.
- Beams part of moment-resisting frame, ratings based on 2018 update to Part C5.
- Concrete floor diaphragm, ratings based on 2018 update to Part C5.
- Precast concrete façade panel connections.
- Stairs.

2.5 Lateral Load Resisting System

a) Transverse direction (Concrete Shear Walls)

Reinforced concrete shear walls are the lateral load resisting system in the transverse direction (east-west). Their thickness varies from 200 mm to 610 mm with rectangular boundary elements. Figure 2, Figure 3 and Figure 4 illustrate the location of the shearwalls above, below and within the ground floor (dark blue solid line). The concrete shear walls are founded on concrete ground beams connecting to pile caps and piles to resist the compression and uplift forces induced by the shear walls under seismic loads.

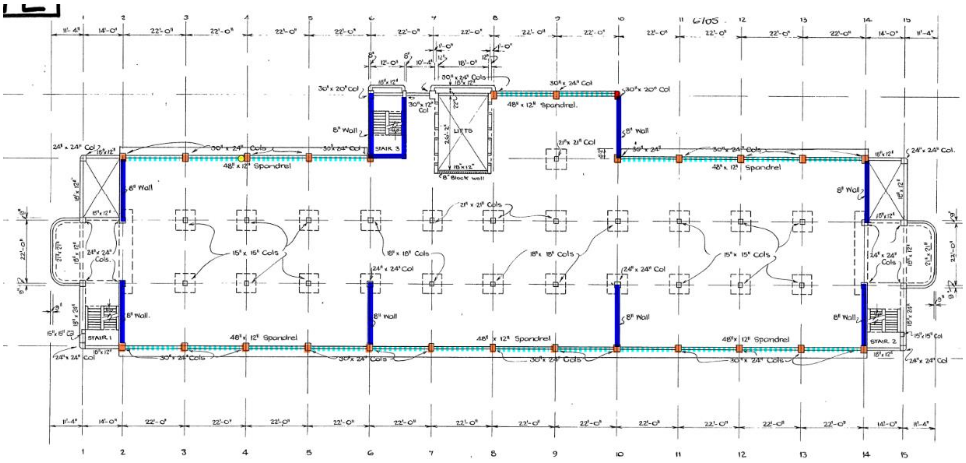

Figure 2: Typical shear wall layout above the ground floor (dark blue lines)

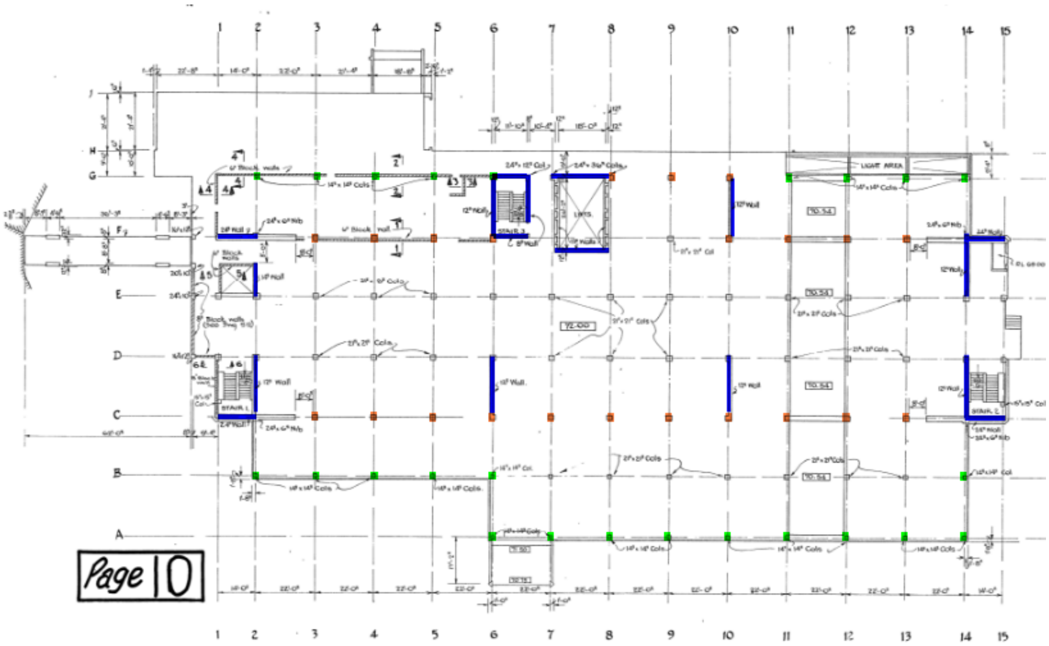

Figure 3: Shear wall layout at ground floor level (dark blue lines)

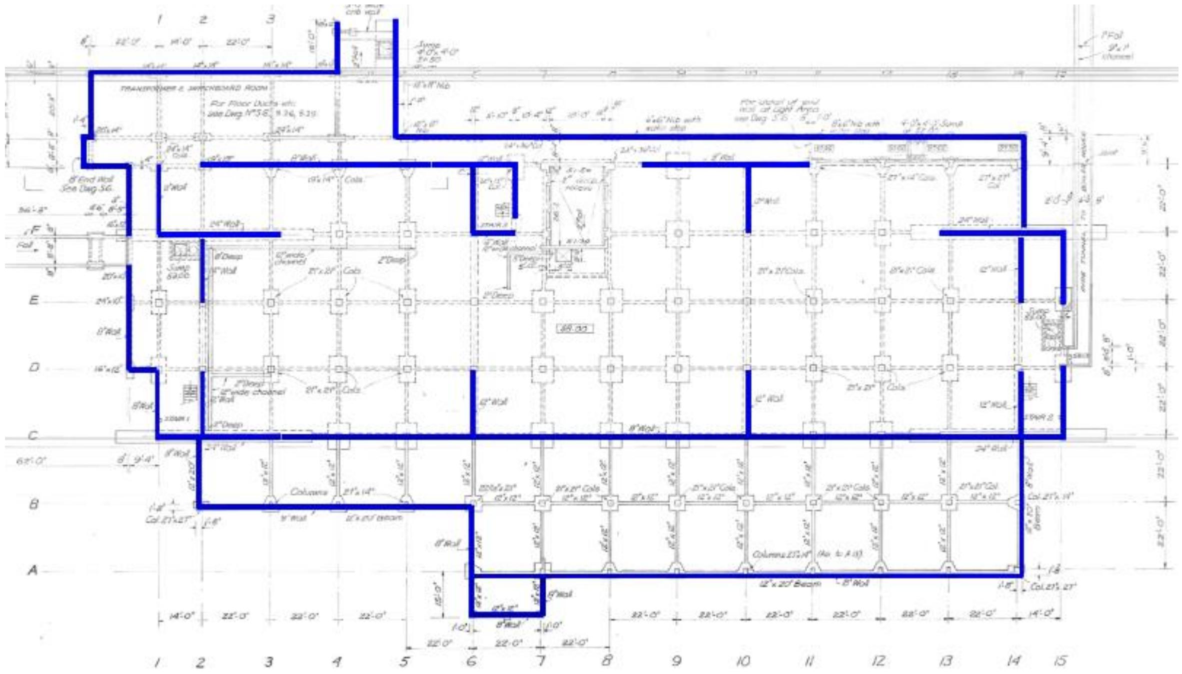

Figure 4: Shear wall layout at basement level (dark blue lines)

b) Transverse direction (Moment Resisting Frames):

The Moment Resisting Frames comprise of concrete columns and deep spandrel beams. Columns were rectangular with dimensions between 610mm and 762 mm. Beam widths range between 305mm and 381 mm and their heights range between 1219 mm and 2286mm. As per assessment, these dimensions for beams and columns have contributed in all stories being vulnerable to weak storey failure.

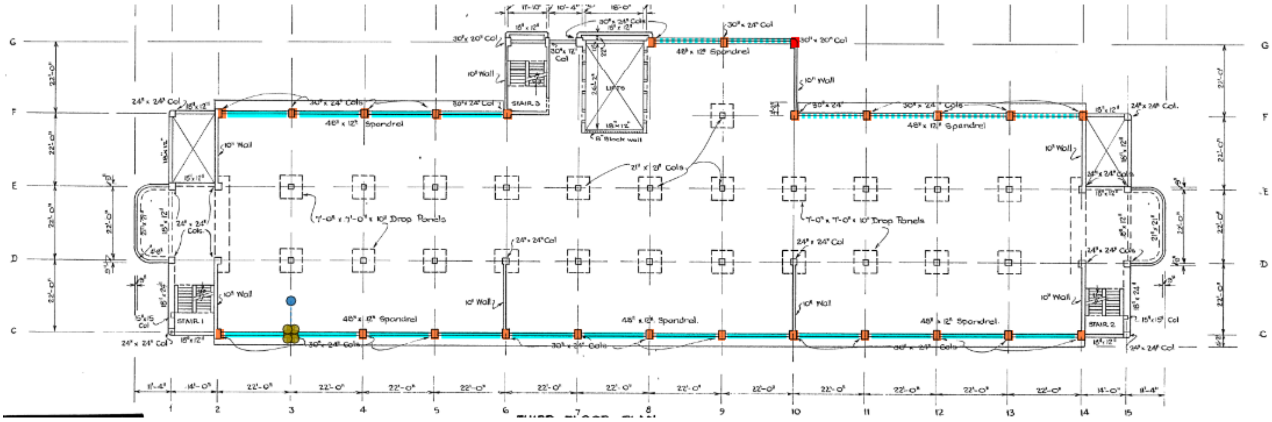

Figure 5: Moment Resisting Frames in the longitudinal direction

2.6 Gravity System

a) Diaphragm

The diaphragm of the structure features concrete flat slab (cast in-situ without beams) with thickenings over the internal gravity columns (Column caps with thickness of 406 mm). The thickness of the slabs for levels 1 to roof is 160 mm and 254 mm for the plant floor and basement. The concrete slabs were reinforced with 16mm diameter deformed bars in each direction typically. Starter bars around the perimeter of the slab connected the slab to the concrete beams and walls. Figure 6 shows an example reinforcement of the diaphragm.

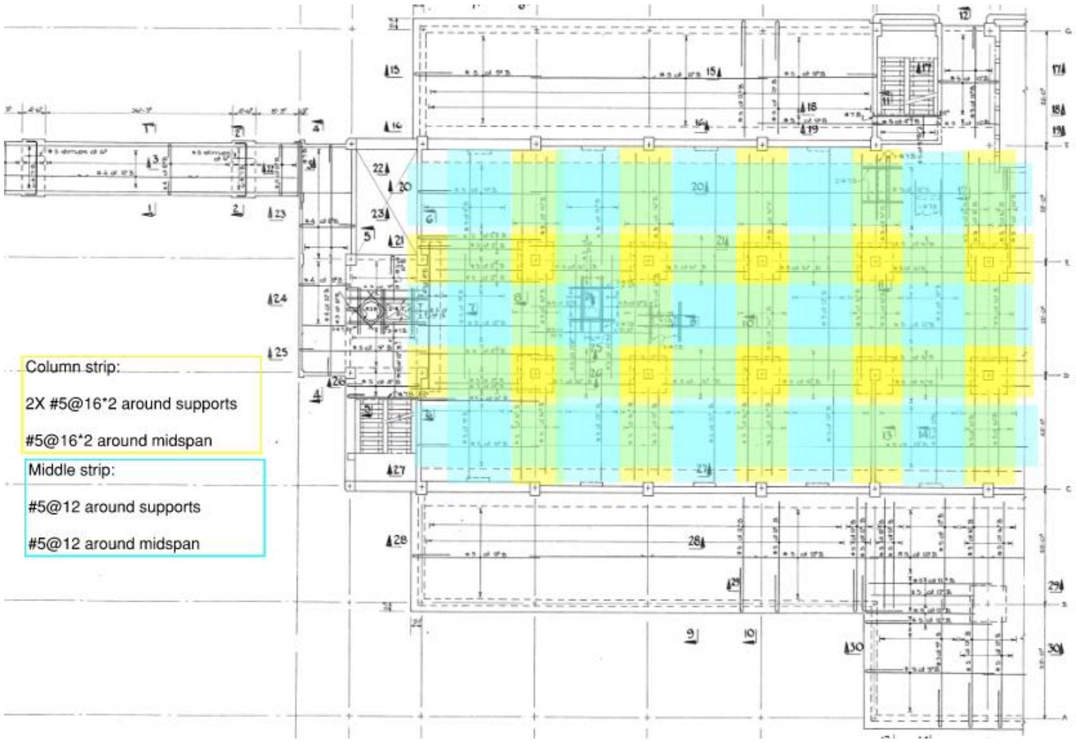

Figure 6: Diaphragm reinforcement (first floor – bottom reinforcement)

b) Concrete Columns (part of gravity load resisting system)

The internal columns, as shown in Figure 7, were part of the gravity system and do not participate in lateral load resistance. Column capitals (slab thickenings) are located around the internal columns.

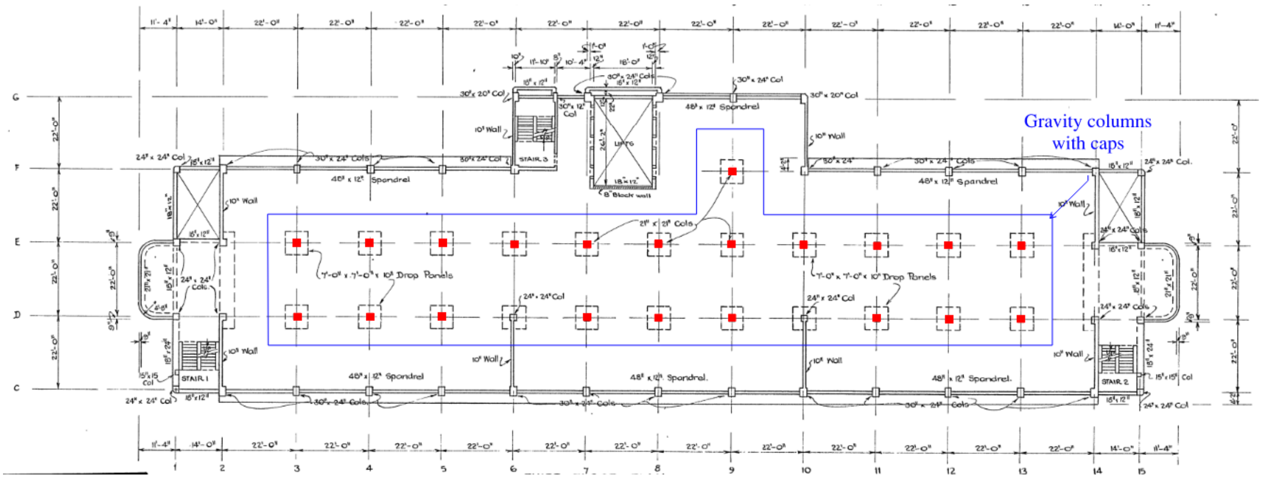

Figure 7: Internal gravity columns with caps (No internal beams – flat slab)

2.7 Cladding

The building is clad with precast concrete panels of varying size and shape. Typically, the precast concrete panels are around 100 mm thick. All panels are connected rigidly to their supporting structure, with no lateral movement allowance provided.

2.8 Foundations and Subsoil

The site subsoil classification, in terms of NZS1170.5:2004; Clause 3.1.3, is considered to be Class D.

The foundation system comprises of three pile types - P1, P2 and P3 – with 7.6m, 7m and 4.7m lengths, and 380mm, 457mm and 457mm diameter, respectively. Pile stiffnesses and capacities (different piles' group are shown in Figure 8) were considered based on a desktop geotechnical study by Aurecon. From the geotechnical study, the piles were found to be slender (long with relatively small diameter) and provide low horizontal stiffness. This was further exacerbated as the piles were typically located in the liquifiable zone (3-6 meters below ground level). The soil and pile properties based on the available data are tabulated in Table 10.

The investigation and review of the available geotechnical information indicates that site consists of loose sand/silts, highly susceptible to liquefaction between the depths at 3.0m and 6.0m. The groundwater table is expected to be around 3.0m to 4.5m depths below the ground. The thickness of the liquefiable layers and depths to groundwater table were inferred from the available ground information and could vary across the site.

It should be also noted that the geotechnical desktop study was undertaken based on limited ground investigation data near the site of the Heretaunga Block. No site-specific ground investigation was completed as part of this study.

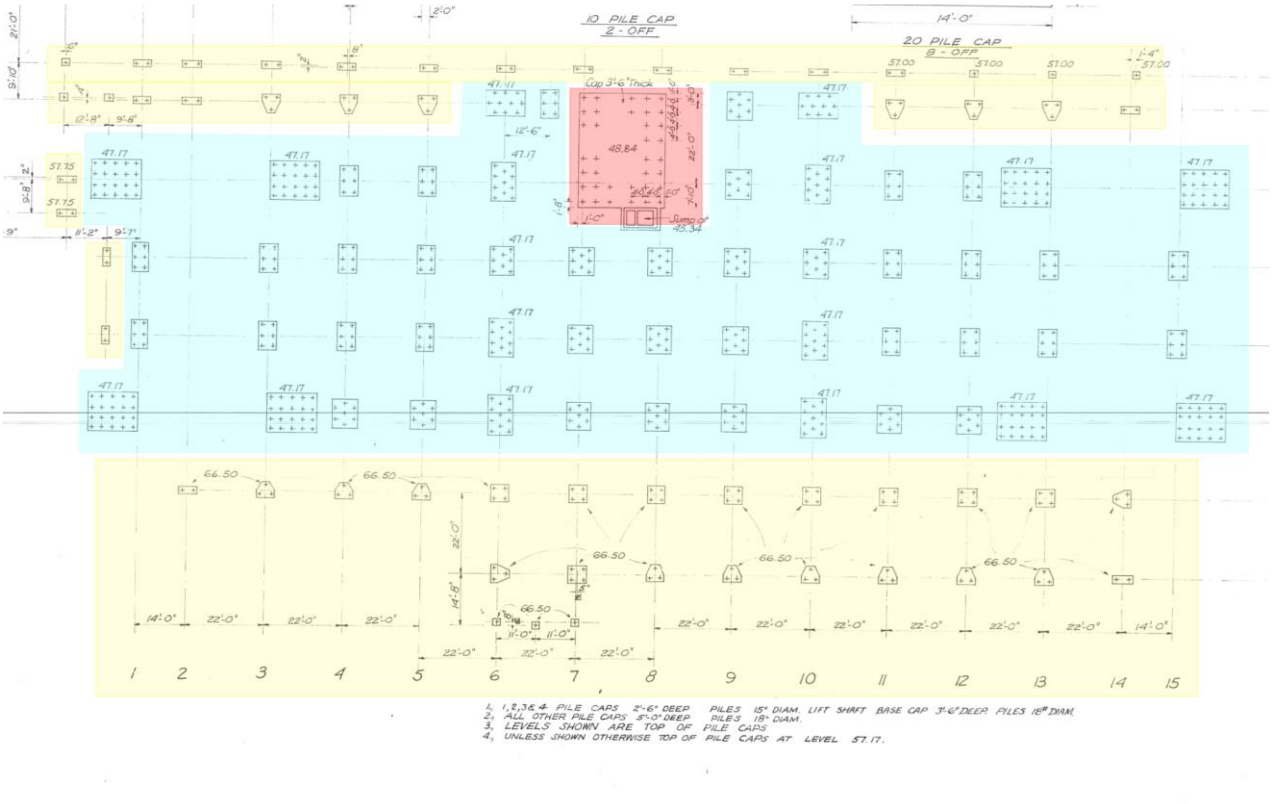

Figure 8: Different pile types by colour (Red P1, Blue P2 and Yellow P3)

3 Assessment Methodology

3.1 Assessment Description

This assessment follows the 2017 Assessment Guidelines and the update(s) to section C5 issued in November 2018.

The key structural elements in this assessment included the following:

- Concrete shear walls
- Moment Resisting frame
- Gravity columns
- Concrete floor diaphragm
- Foundation system
- Precast concrete panels and connections
- Stairs

3.2 Assessment Inputs

3.2.1 General

The structure has been assessed at an Importance Level 3 (IL3) and a design life of 50 years, in accordance with the New Zealand Building Code.

3.2.2 Dead and Superimposed Dead Loads

The self-weight of the walls, frame members and slabs are calculated by the structural analysis program based on the input section size and unit weight.

Table 2: Superimposed dead loads used in the assessment

Load Type	**Element**	**Load**
Super Imposed Dead Load	Floor finishing, service, ceilings	1.25 kPa

3.2.3 Live Loads

The following design live loads were adopted as indicated as per structural drawings and in accordance with NZS1170.1 loading.

Table 3: Live loads use in the assessment

Load Type	**Element**	**Load**
Non-reducible Live Load (1st and ground floor)	———	4 kPa
Reducible Live Load (2nd to 6th floors)	———	3 kPa
Non-reducible Live Load (roof and plant floor)	———	5 kPa

3.2.4 Wind Loads

Consideration of wind loads is outside the scope of this assessment.

3.2.5 Seismic Loading

The following material properties and corresponding characteristic strength and probable strength were used as per the Assessment Guideline Tables C5.3, C5.4 and Section C6.

Table 4: Seismic parameters for building assessments

Design Working Life	50
Importance level	3
Return Period Factor (R)	1.3
Site Subsoil Classification	D
Period (seconds)	Without soil flexibility: Longitudinal: 1.2 (s) Transverse: 0.8 (s) With soil flexibility: Longitudinal: 1.5 (s) Transverse: 1.3 (s)
Hazard Factor (Z)	0.4
Near Fault Factor (N)	$N_{max} = 1$
Ductility Factors	1.25 (both transverse and longitudinal directions)
Sp Factors	0.925

3.2.6 Material Properties

The following material properties and corresponding characteristic strength and probable strength were used as per the Assessment Guideline Tables C5.3, C5.4 and Section C6. No material specification regarding the concrete and steel used in the time was found in the structural drawings.

Table 5: Material properties

Item	**Characteristic Design Strength (MPa)**	**Assessment (Probable) Strength (MPa)**
Reinforcing Steel	N/A	324 MPa
Concrete	20 MPa	30 MPa

3.2.7 Geotechnical Parameters

The site subsoil classification, in terms of NZS1170.5:2004; Clause 3.1.3, is considered to be Class D.

Pile stiffnesses and capacities are as per the desktop geotechnical report by Aurecon Geotechnical engineers. The properties are shown in Table 10. As indicated earlier, these results are based on very limited ground investigation data near the site of the Heretaunga Block.

3.2.8 Computer Modelling

A three-dimensional elastic model was created in ETABS software for analysis. A response spectrum analysis (RSA) was performed on the structure to extract demands for the assessment. Figure 9 shows the 3D view of the Building where considerations for soli flexibility (Soil-Structure-Interaction) as per geotechnical information was considered so that the seismic demands can be further reduced.

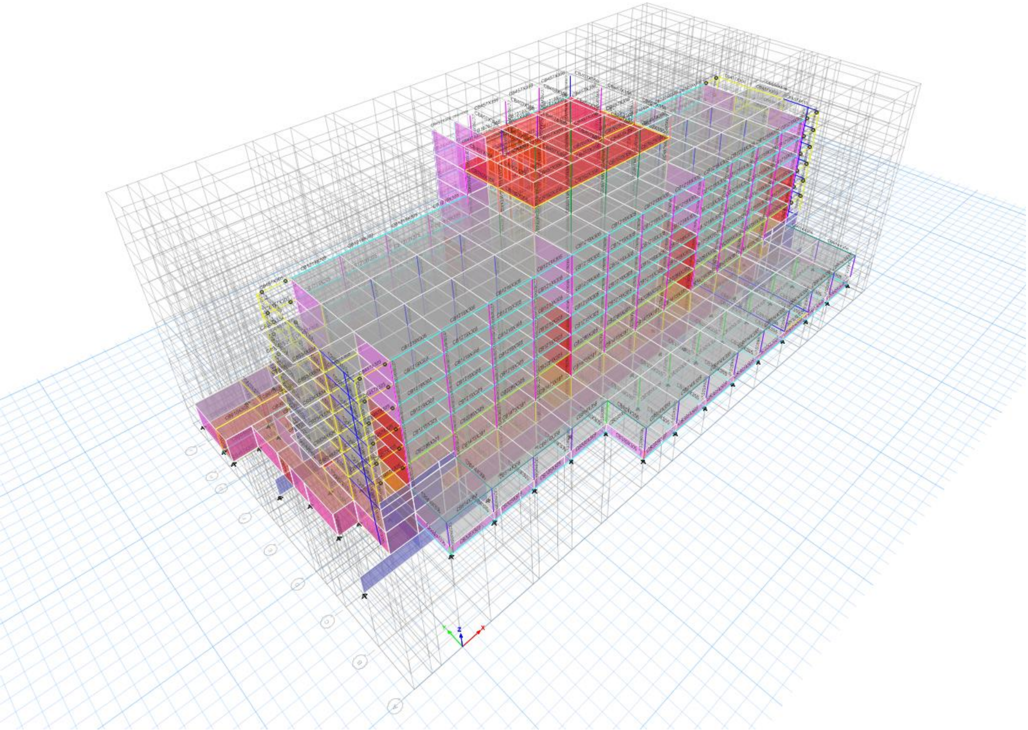

Figure 9: 3D ETABS Model for Building

3.2.9 Assessment Assumptions and Limitations

The limitations of the analysis are as follows:

- Nonlinear behaviour is not captured in the RSA and ESA models; therefore, no allowance is considered for the redistribution of the actions.

The assumptions of the analysis are as follows:

- A nominal ductile behaviour was assumed for the building ($\mu = 1.25$) due to probable brittle behaviour of LLRS in both directions.
- The capacity of columns and shearwalls are dependent on their axial force demand. For the assessment, their capacities are calculated based on the gravity load (G+%Q).

4 Assessment Results

4.1 Assessment Results Summary

Table 6 presents a summary of the results based on the assessment guidelines (*The Seismic Assessment of Existing Buildings, 2017*) incorporating all updates included in the update to section C5 issued on 31 November 2018.

Table 6: Summary of Building Elements *%NBS* rating with soil flexibility

Element	NBS (IL3)	Commentary
Concrete shear walls	30%	The RC walls was limited by their flexural capacity located at the third, fourth and fifth storey.
Moment Resisting frame (Columns)	15%	The RC columns was governed by the columns shear capacity at the roof level. The remaining columns scored between 20% to 30%*NBS*(IL3).
Moment Resisting frame (Beams)	15%	The RC beams was governed by the beams shear capacity located on grid 2-3 and 13-14 located on level 3. The remaining beams scored greater than 34% NBS(IL3).
Concrete floor diaphragm	15%	The concrete floor diaphragm was limited by the reinforcement in the concrete floor at the ground, first and roof level. At these levels, the diaphragm must transfer both inertia and transfer forces to the vertical lateral resisting elements.
Gravity Columns	45%	The “gravity” columns were limited by their drift capacity. The lowest scoring columns are at roof and third floor.
Foundation system	20%	The foundation system was limited by the horizontal capacity of the piles.
Precast concrete panels and connections	15%	The precast concrete panels and connections was limited by the shear failure of the connections
Stairs	15%	The stairs are positively connected at each stair landing and therefore the stair could act as a prop between adjacent levels under a design level earthquake. This may have an undesirable effect on the behaviour of the main structure and the stairs may lose gravity carrying capacity.

Based on the above findings, the structure achieves **15%*NBS* (IL3)** limited by precast concrete façade panels, stairs, concrete floor diaphragms, and moment resisting frames (columns and beams in the longitudinal direction). This corresponds to an overall building grade of **E** to the Assessment Guideline grading scheme indicating that that the structure has a very high life safety risk.

4.2 Structural Elements Performance

4.2.1 Concrete shear walls

The shear walls were typically 6.7m in length with two rectangular boundary elements. The probable location of the plastic hinge was expected to form in levels three to five. The reinforcing detailing in this area is insufficient for a ductile response. Therefore, a nominally ductile behaviour ($\mu=1.25$) was assumed for the shear walls. The shear walls scored 30%*NBS*(IL3) governed by their flexural capacity. A summary of the NBS% is provided in Table 7.

Table 7: Critical *%NBS* for the shear walls

Story	*%NBS* Results Bending	*%NBS* Results Shear
Roof	85%	75%
Story 6	50%	65%
Story 5	35%	50%
Story 4	30%	60%
Story 3	30%	55%
Story 2	50%	70%
Story 1	55%	70%

4.2.2 Moment Resisting Frame

Moment resisting frames in the longitudinal direction of the building are composed of concrete columns and deep reinforced beams. The relatively high capacity of the deep beams means that the frames are vulnerable to weak-story failure at most levels of the building. A weak storey failure means that there is high chance that all deformation is concentrated on one specific floor leading to that storey become pancaked between two adjacent floors. Because of this, a ductility of 1.25 (μ=1.25) was considered for the assessment of the building in the longitudinal direction. The beams and columns are scored a minimal value of 15*%NBS*(IL3), limited by their flexural capacity. The columns scored lowest at roof level and level 3, and the beams scored lowest at the third floor. A summary of the beam and column scores is provided in Table 8 for beams and in Table 9 for columns.

Table 8: Critical *%NBS* for the beams

Level/Grid	***NBS%* Results - Grid C**	***NBS%* Results - Grid F**	***NBS%* Results - Grid G**
Plant Room Roof	—	—	55%
Plant Roof Floor	—	—	25%
Roof	60%	40%	25%
6	35%	30%	30%
5	45%	40%	40%
4	50%	45%	45%
3	10%	10%	40%
2	45%	30%	45%
1	100%	100%	40%

Table 9: Critical *%NBS* for the Columns

Level/Grid	**NBS% Results - Grid C**	**NBS% Results - Grid F**
Roof	15%	15%
6	25%	20%
5	25%	25%
4	30%	25%
3	25%	20%
2	40%	30%
1	100%	85%

4.2.3 Concrete Floor Diaphragm

The building's concrete floors were assessed for their ability to transfer lateral loads to the buildings LLRS. The assessment considered the criteria described in the 2018 revision to Part C5 of the Assessment Guidelines.

The floor bays are typically 80m long by 20.1m wide with concrete beams around the floor bay perimeter. The diaphragms are restrained by the shearwalls in the transverse direction and by the Moment Resisting Frames in the longitudinal direction.

The flooring system and diaphragm are formed of cast-in-situ reinforced slab with a 160mm thickness for first floor to roof and 254 mm thickness for the ground and plant floor.

The diaphragm was assigned a minimal rating of 15*%NBS*(IL3) for the first, roof and ground floors due to lack of a reliable load path for transferring the lateral loads. This is mainly because of the considerable amount of transfer load that needs to be resisted by the diaphragm at those levels. The capacity of the diaphragm was limited by the performance of the tension elements.

An illustration of the modelling can be found in Figure 10.

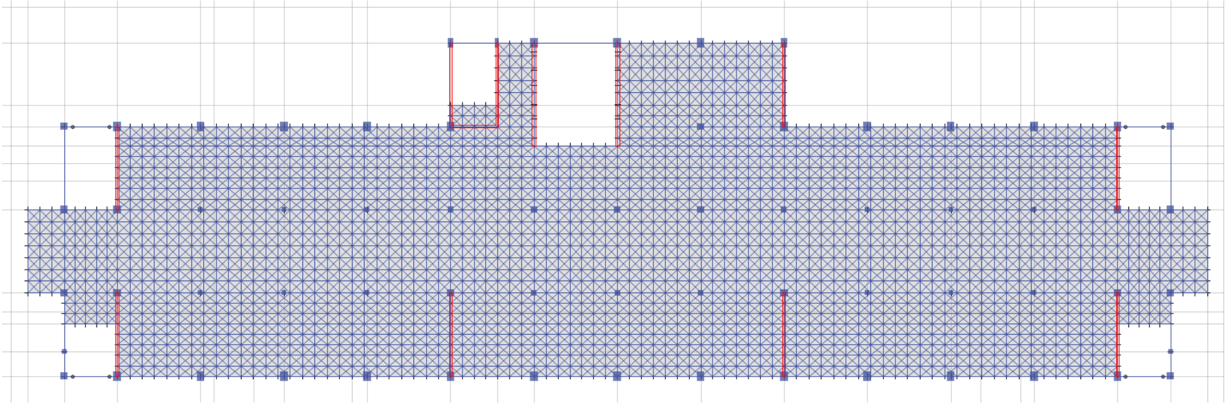

Figure 10: Grillage model – Roof floor

4.2.4 Gravity Columns

The reinforced concrete gravity columns had thickenings where connecting to the slabs (column capitals). They were assessed for punching-shear failure and drift capacity at the onset of gravity resistance loss. Assessment of the gravity columns found they were not susceptible to punching shear but due to low drift capacity, they scored 45*%NBS*(IL3). The relatively large gravity load demands on the columns contributed to their low drift capacity.

4.2.5 Foundation System

A geotechnical desktop study was undertaken based on limited ground investigation data near the site of the Heretaunga Block. No site-specific ground investigation was completed as part of this study. The review of the available geotechnical information indicates that the site consists of loose sand/silts and is highly susceptible to liquefaction between the depths at 3.0m and 6.0m. The groundwater table is expected to be around 3.0m to 4.5m depths below the ground. The thickness of the liquefiable layers and depths to groundwater table were inferred from the limited available ground information and could vary across the site.

The pile horizontal capacity for each type of pile was calculated in the geotechnical desktop study (see Table 10). Given that a portion of the piles, including the pile caps, were located in the liquifiable layer, the lateral capacity of the piles was adversely affected. This has led to the rating of 20% NBS(IL3).

The score for ground beams is 60*%NBS*(IL3) and was governed by the axial capacity of the ground beams (The score may increase by introducing some ductility into the building).

4.2.6 Precast Concrete Panels and Connections

The precast concrete cladding panels were rigidly connected to the primary structure, typically at the top and bottom of the panels; and do not accommodate for lateral inter-storey deflections of the building. The precast panels scored 15*%NBS*, which was governed by the shear capacity of the panel connections. Failure of the panel connections could cause the panels to detach from the building and fall to the ground, posing a life safety hazard.

4.2.7 Stairs

The Department of Building and Housing issued their Practice Advisory 13 in response to concerns about stair collapse and damage observed in the Christchurch earthquake. The primary concern of this Practice Advisory is stairs with sliding support details in mid to high-rise buildings. For these types of stairs, the recommendation is that the stair flights be detailed so that the stairs are free to slide but with sufficient sliding ledge support width available.

The stairs are constructed from precast concrete stair beams cast-in to insitu concrete landings, and precast treads. The connections of the stairs to the landings are fixed with no allowance for sliding or lateral movement of the building. This has contributed to imposing large forces during the inter-story movements. The stairs score 15%*NBS*(IL3) governed by the axial capacity of the stairs.

4.2.8 Storey Drift

NZS1170.5 sets the maximum inter-storey drift to 2.5% at ULS. This limit is imposed to minimise the probability of instability through development of soft storey mechanism as well as to prevent damage to non-skeletal elements. The deflections considered are to be from an elastic analysis and scaled by the modal scale factor.

It was found that the critical storey drifts were in the order of 3% in the longitudinal direction, (3rd and 4th floors) and 0.8% in the transverse direction (roof). The drift in longitudinal direction exceeds the code limit.

4.3 Structural Weaknesses and Life Safety Hazards

4.3.1 Critical Structural Weakness

The Critical Structural Weakness (CSW) is the lowest scoring structural weakness determined in the assessment. Based on the results of the DSA, the CSW for this building would be listed as below elements as they are all rated equally:

- Moment-resisting frame columns
- Moment-resisting frame beams
- Concrete floor diaphragm
- Precast concrete façade panel connections.
- Stairs.

4.3.2 Severe Structural Weaknesses

A Severe Structural Weakness (SSW) is a defined structural weakness that is potentially associated with collapse and for which the capacity may not be reliably assessed based on current knowledge.

Based on the assessment of the building, none of the structural elements was found as the severe structural weakness (SSW).

5 Potential Strengthening Options

5.1 Scope of Strengthening

Recommended in this section are a set of potential strengthening options that describe an approximate scope of works for seismic retrofit to a target performance of 67*%NBS* (IL3). This is regarded as the recommended industry standard requirement for the strengthening of existing buildings. The strengthening options recommended are only of a schematic level detail, and a detailed design will be required for construction documents. It should be noted that the schematic design presented here is one structural solution and alternative options can be explored further in the future.

5.2 Suggested Improvements

5.2.1 Moment Resisting Frames

The performance of the Moment Resisting Frames is governed by weak story failure. This limited the level of available ductility considered in the assessment and resulted in larger seismic loads. Apart from the weak storey failure, it was found that the inter-storey drifts are at the limit of code requirements.

Given the beams had closely spaced shear reinforcement, it is believed that some ductility can be introduced into the structure if the weak storey failure mechanism is addressed. To do so as well as keep the drift within the code limitation, the flexural capacity of the beams is suggested to be reduced while the flexural capacity of the column is suggested to be improved. Weakening of the deep spandrel beams can be achieved by selectively cutting some longitudinal reinforcing bars to achieve the required ductility of the frames and remediate the weak story failure mechanism.

An illustration of possible weakening is shown in Figure 11.

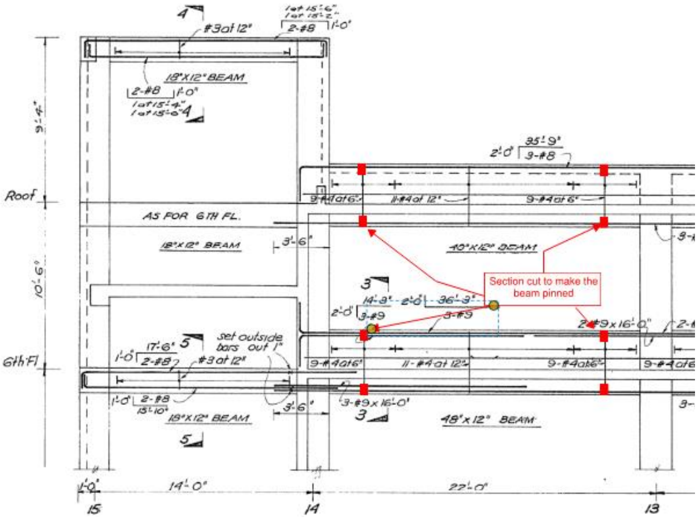

Figure 11: selective weakening of the beams by cutting the longitudinal reinforcement (example shown at the levels 6 and roof, grid 13-14)

For the strengthening of the columns, there are a number of alternatives. One is to increase their dimensions to improve the flexural and shear capacity. Next option can be to employ Fibre Reinforced Polymer (FRP) wrap or steel jackets to improve their confinement, thereby attaining a higher flexural capacity.

5.2.2 Shearwalls

As shown in Table 7, the performance of the shear walls is limited by their flexural capacity. This could be improved by increasing the wall thicknesses throughout their height to increase both flexural and shear capacity, or by adding steel or FRP wrapping to the walls.

It was also noted form the analysis that the plastic hinge would form at the intermediate floors rather than the base of the wall. If the flexural capacity of the intermediate floors is to be increased, the strengthening design could explore methodologies to force the formation of the plastic hinge to the base of the wall, allowing for a ductile building response and improvement in overall score.

5.2.3 Diaphragm

By doing the above mentioned remediations for the shear walls and moment frames, the ductility capacity of the building can be increased, thereby reducing the seismic demands. This will assist in reducing the diaphragm forces and improve the NBS% rating. If needed, further improvement can be achieved by adding of tension elements on the ground, first and roof floor. This may be achieved by installation of Fibre Reinforced Polymer (FRP) or structural steel strips to enhance the diaphragm tension capacity in critical areas.

5.2.4 Foundation

The performance of the foundation was assessed based on limited information and ground investigation data near the site of the Heretaunga Block. Therefore, an improvement on the performance of the foundation may be achieved by undertaking site-specific investigations, which could provide further information around the site's susceptibility to liquefaction or not. Furthermore, more information can be acquired on the lateral and vertical capacity/stiffness of the piles.

In conjunction with remediations to other elements of the building, the effects of the updated ductility capacity of the building should be considered on the foundations; an increase in ductility results in lower seismic demands, which may be beneficial to the performance of the foundations.

5.2.5 Gravity Columns

The internal gravity columns (shown in Figure 7) have limited deflection capacity due to large axial gravity loads and inconsiderable amounts of transverse reinforcement. The gravity columns could be strengthened by increasing their shear capacity. This can be achieved by, for example, adding an external steel jacket or Fibre Reinforced Polymer (FRP) wrap around the column. Other options include reducing the gravity load on the columns or increasing their gross section area.

5.2.6 Stairs

In order to improve the seismic performance of the stairs, the connections of the stairs to the landings should be modified to allow for the expected sliding during an earthquake. Additional gravity support of the stairs will likely be required, dependent on the strengthening scheme.

5.2.7 Precast Panels

The capacity of the precast façade panel connections are not sufficient and require both strengthening and provision for seismic movement. Figure 12 and Figure 13 show an example of a typical precast panel connection upgrade. Upgraded connections would need to be provided to all the precast panels.

It would be worth exploring whether the existing precast panels could be removed entirely, and new cladding panels be installed. The design of the new panels and connections can incorporate lateral movement requirements. Adding new and lighter cladding system for the building would also assist in reducing the weight of the building.

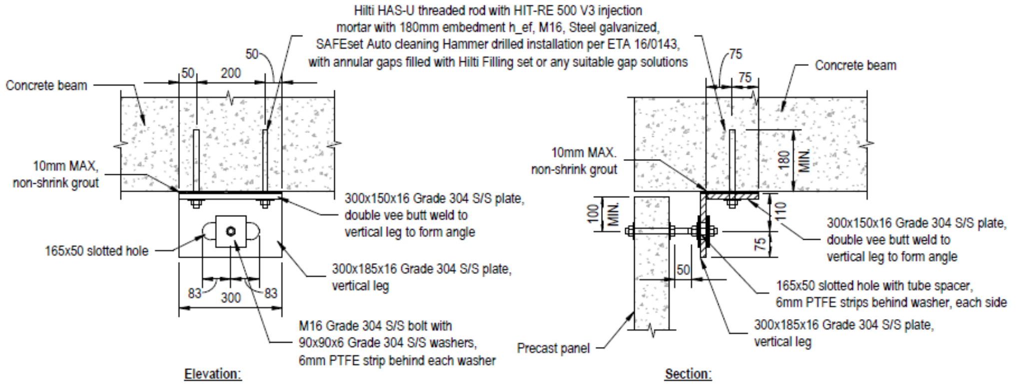

Connection Type 1: (Top Connection)

Figure 12: Example typical precast panel top connection upgrade

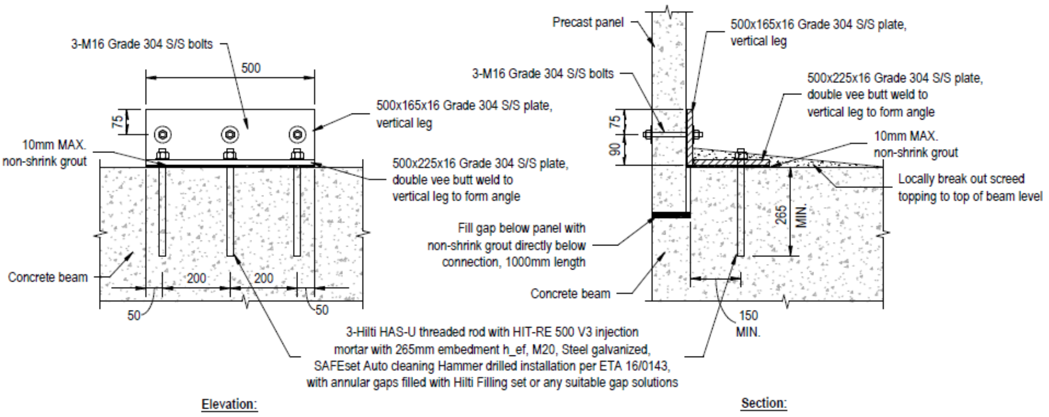

Connection Type 2: (Bottom Connection)

Figure 13: Example typical precast panel bottom connection upgrade

6 Conclusions and Recommendations

6.1 Conclusion

The Heretaunga Block at Hutt Hospital in Wellington achieves an overall seismic rating of **15%*NBS*(IL3).** This is based on the capacity of the moment resisting frame beams and columns, concrete floor diaphragm, precast concrete façade panel, and concrete stairs. This classifies the Heretaunga Block as **Class E** to the Assessment Guideline rating system. This may classify the building as less than **33%*NBS*(IL2)** and fulfils one of the criteria as an Earthquake-prone to the New Zealand Building Act, subject to the Territorial Authority.

6.2 Recommendations

Seismic improvements have been recommended to achieve a minimum seismic capacity of 67%*NBS*(IL3). Strengthening would include:

- Moment Resisting Frames –selectively weaken some of the concrete moment frame beams,
- Shear walls – increasing the thickness of some of the walls,
- Diaphragms – apply FRP to the diaphragms in critical locations,
- Foundations – further investigation of the site ground conditions
- Gravity columns – install either steel jackets or FRP wraps around the columns,
- Stairs – upgrade the connections to allow for movement. Additional gravity support of the stairs will likely be required dependent on the strengthening scheme,
- Precast panels by replacing the whole cladding system or replacing the existing connections with modern version.

Further investigation and detailed design will need to be undertaken to develop the suggested seismic improvements. Upon completion of design documentation, Building Consent will be required to be lodged and approved before the construction of the suggested seismic improvements.

7 Explanatory Notes

- The information contained in this report has been prepared by Aurecon at the request of the Hutt Valley District Health Board. and is exclusively for the Hutt Valley District Health Board's use and reliance. It is not possible to make a proper assessment of this review without a clear understanding of the terms of engagement under which it has been prepared, including the scope of the instructions and directions given to and the assumptions made by Aurecon. The report will not address issues which would need to be considered for another party if that party's particular circumstances, requirements and experience were known and, further, may make assumptions about matters of which a third party is not aware. Aurecon accepts no responsibility or liability to any third party for any loss or damage whatsoever arising out of the use of or reliance on this report by that party or any party other than our Client.
- This report contains the professional opinion of Aurecon as to the matters set out herein, in the light of the information available to it during preparation, using its professional judgment and acting in accordance with the standard of care and skill usually exercised by professional engineers providing similar services in similar circumstances. Aurecon is not able to give any warranty or guarantee that all possible damage, defects, conditions or qualities have been identified.
- The report is based on information that has been provided to Aurecon from other sources or by other parties. The report has been prepared strictly on the basis that the information that has been provided is accurate, complete and adequate, except where otherwise identified during site investigation inspections. To the extent that any information is inaccurate, incomplete or inadequate, Aurecon takes no responsibility and disclaims all liability whatsoever for any loss or damage that results from any conclusions based on information that has been provided to Aurecon.
- The inspections of the building discussed in this report have been undertaken to inspect the structure and confirm the adequacy of the existing drawings. This report does not address building defects. Where site inspections were undertaken, they were restricted to visual inspections with intent to determine existing building main structural elements only.
- We have not undertaken a review of secondary elements such as ceilings, building services, plant and partitions.

Appendix A

Pile stiffnesses and capacities

Table 10: Pile property based on geotechnical data

Pile Group	**type 1**	**type 2**	**type 3**	**type 4**	**type 5**	**type 6**	**type 7**	**type 8**	**type 9**	**type 10**	**type 11**
Category	**P1**	**P1**	**P1**	**P1**	**P2**	**P2**	**P2**	**P2**	**P2**	**P2**	**P3**
Number of piles in a group	1	2	3	4	6	7	8	11	10	20	38
Number of group	8	20	17	9	21	8	8	6	2	8	1
Single Pile Tension Capacity (kN)	110	110	110	110	120	120	120	120	120	120	90
Single Pile Compression Capacity (kN)	300	300	300	300	440	440	440	440	440	440	400
Single Pile Lateral Capacity (kN)	50	50	50	50	70	70	70	70	70	70	90
Single Pile Vertical Stiffness (kN/mm)	30	30	30	30	40	40	40	40	40	40	40
Single Pile Horizental Stiffness (kN/mm)	0.6	0.6	0.6	0.6	1.25	1.25	1.25	1.25	1.25	1.25	1.5
Group efficiency factor (Vertical Capacity)	0.7	0.7	0.7	0.7	0.5	0.5	0.5	0.5	0.5	0.5	0.6
Group efficiency factor (Lateral Capacity)	0.55	0.55	0.55	0.55	0.3	0.3	0.3	0.3	0.3	0.3	0.4
Group efficiency factor (Vertical stiffness)	0.5	0.5	0.5	0.5	0.5	0.5	0.5	0.5	0.5	0.5	0.6
Group efficiency factor (Lateral stiffness)	0.45	0.45	0.45	0.45	0.4	0.4	0.4	0.4	0.4	0.4	0.45
Group tension capacity (kN)	77	154	231	308	360	420	480	660	600	1200	2052
Group compression capacity (kN)	210	420	630	840	1320	1540	1760	2420	2200	4400	9120
Group lateral capacity (kN)	220	1100	1402.5	990	2646	1176	1344	1386	420	3360	1368
Group vertial stiffness (kN/mm)	15	30	45	60	120	140	160	220	200	400	912
Group horizental stiffness (kN/mm)	0.27	0.54	0.81	1.08	3	3.5	4	5.5	5	10	25.65

Document prepared by

Aurecon New Zealand Limited
Spark Central
Level 8, 42-52 Willis Street
Wellington 6011
PO Box 1591
Wellington 6140
New Zealand

T +64 4 472 9589
F +64 4 472 9922
E wellington@aurecongroup.com
W aurecongroup.com

Bringing ideas to life

To	**Dean Ward**	From	**Sam Jones**
Copy	Darrell Chinn, Steve Crombie	Reference	**520602**
Date	**2022-03-29**	Pages (including this page)	**4 + 3**
Subject	**Hutt Hospital - Heretaunga Block Detailed Seismic Assessment Summary**		

1 Background

Aurecon has completed a draft Detailed Seismic Assessment (DSA) of the Heretaunga Block, located at Hutt Hospital, Lower Hutt. The draft assessment concluded that the Heretaunga Block Building is rated at 15%NBS(IL3). This corresponds to a "Grade E" (Very High Risk) building as defined by the current 2017 Ministry of Business, Innovation and Employment (MBIE) Guidelines building grading scheme.

The draft DSA for the building identified a number of elements within the building that below 33%NBS (IL3). These are :

- Moment Resisting frames (Columns & Beams) – 15%NBS (IL3)
- Concrete floor diaphragms – 15%NBS (IL3)
- Precast concrete panels and connections – 15%NBS (IL3)
- Stairs – 15%NBS (IL3)
- Foundation system – 20%NBS (IL3)
- Concrete shear walls – 30%NBS(IL3)

The purpose of this memorandum is to discuss how the building may behave during a large earthquake (design level earthquake) and aid in future site planning decisions. We note that Aurecon's seismic assessment of the Heretaunga block allows us to determine the governing elements that may fail first during a seismic event. Our assessment does not include post-failure behaviour of the structural elements.

We note that the assessment has been conducted in accordance with *The Seismic Assessment of Existing Buildings – Technical Guidelines for Engineering Assessments*, dated July 2017 (the Guidelines), including the updated *Section C5 – Concrete Buildings – Proposed Revision to the Engineering Assessment Guidelines,* dated November 2018*.*

2 Building Failure Mechanism

2.1 Moment Resisting frame (Columns & Beams)

The assessment outcome has revealed that Moment Resisting Frames that provide seismic resistance in the longitudinal direction do not have sufficient strength to resist against a design level earthquake.

A key characteristic of the Moment Resisting frames in this building are the deep concrete beams in relation to the concrete column sizes. This is likely to lead to a probable brittle failure mode where the concrete columns fail before the concrete beams. We refer to this failure mechanism as "column-sway" or "weak-storey". This mechanism may contribute to the concentration of deformation in one specific floor and result in column collapse. The columns support floors above, so collapse of the columns would lead to loss of support for the floors above.

During a design level earthquake, the columns and beams at third and fourth floors and at roof level have been calculated to fail prior to other floors.

2.2 Concrete floor diaphragm

Horizontal floors of buildings have generally two main roles: (a) supporting the gravity loads on the floors and (b) acting as a diaphragm to transfer earthquake loads to the vertical elements. While the concrete floors have sufficient capacity to support the gravity loads, the floors at roof level, first floor and ground floor have been found to have insufficient capacity to transfer earthquake loads to the vertical elements.

At these floors, there are transfers of load through the building into different lateral load resisting systems. These transfers result in stress concentrations in the floor slabs that exceed the tension capacity of the reinforcement. In these areas of stress concentration, typically near the lateral load resisting systems, we expect that some localized cracks to form as the tension capacity of the floor is exceeded. The cracks may open-up and progressively widen under cyclic sway of the building and could, if extreme, result in a loss of gravity support.

As the cracks open, it is possible (but not calculable) that the loads in the floors would redistribute to other areas of the building resulting in some level of performance past the 15% loading value noted. However, this is not readily determined without significant analysis.

2.3 Precast concrete panels and connections

The existing connections between the precast concrete cladding panels and main structure do not allow for any lateral movement of the building. So, as the building moves under earthquake loading, the panels and connections will attract load until either the connections to the main structure fail, or the panels themselves reach their capacity. Our assessment determined that connections will fail before the precast panels, which could result in the heavy concrete panels falling off the building and pose a life-safety hazard for people nearby. The area affected will be in close proximity to the building, however, the exact extent of the fall zone is not easily quantifiable.

It is likely that the precast panels currently provide a significant amount of stiffness to the building, potentially limiting seismic movements during the small to moderate events the building has been subject to since its construction. Our concern is that the connection failure of the panels is brittle shear failure that will result in both panels falling from the building and also a potentially sudden increase in building movement, resulting in load increases on the building frames.

2.4 Stairs

The precast stair beams are connected to the insitu landings with cast-in reinforcing bars. The landings are also rigidly connected to the surrounding concrete walls. Like the precast cladding panel connections, the stair connections do not allow for lateral movement of the building, and so could attract force under earthquake loading.

During a design level earthquake, the stair connections are expected to fail through brittle tension failure as the building tries to move, pulling the stairs off the landings. This could result in the precast stair beams disconnecting from the landings and failing to the level below.

2.5 Foundation system

It should be emphasised that the geotechnical desktop study was undertaken based on limited existing ground investigation data near the site of the Heretaunga Block. No site-specific ground investigation was completed as part of this study.

The investigation and review of the available geotechnical information has revealed that the soil below the structure is susceptible to liquefaction due to the presence of loose sands and ground water. As inferred from the name “liquefaction”, the soil would behave more like a liquid rather than a solid showing minimal stiffness and strength at the time of design level earthquake, which may lead to the overall instability and collapse of the structure.

Under liquefaction, the lateral strength of the piles was adversely affected which contributes to the poor %NBS rating of the foundation. This failure is likely to result in a softening of the building response, which may reduce the impact of the earthquake of the superstructure of the building, but will also result in permanent lateral and vertical displacement of the building.

2.6 Concrete Shear walls

The assessment outcome has revealed that the shear walls, that form the lateral load resisting system in the transverse direction of the building will fail in bending during a design level earthquake. The walls with the lowest capacity are those one levels 3 and 4 of the building.

A bending failure is more desirable than a shear failure and is part of what would normally be considered a “ductile” response. However in this case, the detailing of the reinforcing in these walls is insufficient to allow ductility to be considered when assessing the walls in accordance with the Guideline.

During seismic shaking we would envisage large concentrated inclined cracks to form at each end of the walls. These cracks may open up further toward the centre of the wall due to cyclic sway of the building. As movement increases, cover concrete is likely to spall and there is potential for the walls to buckle under vertical loading.

2.7 Building Failure Summary

This is a large and complex building with a number of elements that score poorly when reviewed using the guidelines. To determine the exact order of failure of the various building elements, an extensive non-linear analysis would typically be required. This was outside the scope of our assessment, and we would note that the cost of such an assessment would not yield the HVDHB any tangible benefit.

It is our opinion, that the likely failure hierarchy of the building would be the precast panels failing first, following by an increase in building displacements that would result in failures in either the stairs or the moment resisting frames. We would suggest that the moment frames would fail prior to the foundations, diaphragms or shear walls, resulting in partial collapse of the building.

3 Design Level Earthquake, Probability of Exceedance and Design Life

In order to assist HVDHB in considering the risk associated with the Heretaunga Block, we have provided a summary of how earthquake return periods are determined and compare across different time periods. We have provided a similar discussion to CCDHB in the past with respect to other buildings.

Assessment of buildings in New Zealand are based on the premise that the building must withstand a “design level earthquake” without collapse within the assumed design life. The design level earthquake is a hypothetical earthquake that is defined in the New Zealand standards (NZS 1170.5) and is dependent on the location of the building in New Zealand, its importance level, ground conditions at the site, design life and other factors.

The determination of the level of shaking associated with the design level earthquake has been defined based on a probabilistic assessment of an event of a particular size, taking into account a wide range of inputs including parameters like locations of faults and what level of shaking could be associated with a rupture on the fault (an earthquake).

As the process used is of probabilistic nature, it does not mean that the building will never experience a more severe earthquake than the design level earthquake. The probability used for this assessment has been defined in the standard as being at an acceptable level of risk.

To put this into context and referencing the Engineering New Zealand document “talking about %NBS” (attached), the target for new buildings is around a 1 in 1,000,000 chance of a fatality [during an earthquake] – a very low level of seismic risk. This is similar to the risk of death by lightning strike and can be compared to 1 in 14,000 New Zealanders dying on our roads in 2019.

For the Heretaunga Block, the assessed rating of 15%NBS represents a risk 25 times greater than a building rated at 100%NBS. Using the Engineering NZ comparison this would be a 1 in 40,000 risk.

Looking at this another way, and in line with how this risk is presented in NZS 1170.5, the design level earthquake for a typical building is based on a 1 in 500-year event. That is, an event which has a 10% probability of occurring in the 50-year design life of a building. Typical buildings are described as Importance Level 2 (IL2) buildings and include most buildings such as office buildings, warehouses, apartment buildings and houses.

The Heretaunga Block building is currently classified as an IL3 structure based on being a “healthcare facilities with capacities of 50 or more patients but not having surgery or emergency treatment facilities”. The design level earthquake for a typical IL3 building is based on a 1 in 1000-year event, an event which has a 5% probability of occurring in the 50-year design life of a building.

The statistical chance of exceedance may be used when considering the future expected life span of the building, as well as potential strengthening options. When considering the 15%NBS rating of the Heretaunga block, the probability of experiencing an earthquake large enough to cause a life safety hazard in the building is 90% over the 50-year design life of the building.

It can be shown that the probability of the event occurring decreases relative to the design life of the building. For example, when considering the 15%NBS rating of the Heretaunga Block, the probability of experiencing an earthquake large enough to cause a life safety hazard in the building is approximately 10% if the design life is reduced to two-year (if for example the building was to be decanted or strengthened over a 2 year period). The following table is prepared to assist in the future contingency planning:

Probability of Exceedance over Design Life		
Design life (yrs)	**15%NBS(IL3)**	**20%NBS(IL3)**
5	Approx. 25%	Approx. 15%
2	Approx. 10%	Approx. 7%
1	Approx. 5%	Approx. 4%

REVISED VERSION OF C5

TALKING ABOUT %NBS

October 2019

This information for engineers should be read alongside our factsheet introducing the revised (yellow) version of C5, and this information released by MBIE.

We've developed this factsheet to provide guidance about how you should use the revised (yellow) version of C5 when giving a *%NBS* rating, and to help you advise owners of buildings with low ratings.

If a building has a rating of less than 34*%NBS*, this points to a definite need to address its vulnerable structural features within a reasonable period of time. However, a rating of less than 34%NBS does not mean the building is dangerous or poses an imminent risk. In most cases, from an engineering risk perspective, it can continue to be occupied. Decisions around the continued occupancy of a low-rating building are the responsibility of the owner and tenants.

FREQUENTLY ASKED QUESTIONS

What is a *%NBS* rating?

A *%NBS* rating indicates the percentage of the New Building Standard that a building achieves in terms of protecting life in earthquakes.

When you calculate a *%NBS* rating, you are basically assessing the capability of a building to resist earthquake shaking. You do this by determining its probable capacity to resist shaking and comparing this against the ultimate limit state loading requirements for new buildings defined in the New Zealand Earthquake Loadings Standard issued on 1 July 2017 (NZS1170.5).

What's the purpose of *%NBS* ratings?

The *%NBS* rating provides an indication of how well the building protects life when compared with a hypothetical similar new building on that same site that just complies with the minimum standard required by the Building Code.

A *%NBS* rating allows comparison between buildings as well as against the earthquake-prone building requirements.

It's worth pointing out that correctly designed and constructed new buildings can be expected to have equivalent ratings well in excess of 100*%NBS*.

What are the limitations of *%NBS* ratings?

A *%NBS* rating doesn't predict how the building will perform in a particular earthquake. Earthquakes have a range of different ground-shaking effects. How a certain earthquake affects a specific building at a particular site depends on many factors. These include the earthquake itself, local geological and geotechnical features, the characteristics of that specific building and how all of these factors interact.

This means a *%NBS* rating does not represent an absolute assessment of risk or safety. For example, a rating of less than 34*%NBS* does not mean a building poses an imminent risk nor is that building expected to collapse in moderate levels of earthquake shaking. However, that building is expected to present a greater risk to life during earthquake shaking than a building with a significantly higher rating.

%NBS is only about performance in terms of protecting people's lives. A *%NBS* rating says nothing about likely damage to the building. If a building has a high *%NBS* rating, this doesn't mean it won't be damaged by an earthquake; it means people are more likely to be able to escape unharmed. If a building has a high *%NBS* rating, it isn't necessarily less likely to be damaged during an earthquake than a building with a low *%NBS* rating.

How does a building's occupancy or use affect *%NBS*?

If a building has a higher occupancy than defined for typical use, it's measured against a higher seismic standard. Remember that *%NBS* rating is relative to the standard required of a similar new building.

For example, if you assess a building that features crowd loadings, it will be characterised as Importance Level 3 (IL3). If you assess that building as 50%NBS, it will be against the higher IL3 standard. It therefore achieves a higher seismic standard than an office building that's rated at 50%NBS but against the lower IL2 standard. This is why it is important to include the Importance Level with the assessment rating – for example, 50*%NBS* (IL3).

Are all buildings rated at less than 34*%NBS* considered to be earthquake prone?

Buildings are determined by the Territorial Authority (TA) to be earthquake prone if they fall below the threshold set out under the Building Act 2004.

If a TA suspects that a building is earthquake prone, they will advise the owner that the building is potentially earthquake prone and will request an engineering assessment to confirm its status. When you carry out this assessment, you can only use the 2017 Red Book version of C5, because this version is the one formally recognised under MBIE's EPB methodology. The TA will then determine if the building is earthquake prone if it's rated under 34*%NBS*.

If you assess a building using the Yellow version of C5, and this results in a rating of less than 34*%NBS*, in the current regulatory environment this assessment will not lead to the building being earthquake prone.

How risky are earthquake-prone buildings (or buildings rated at less than 34*%NBS*)?

A rating of less than 34*%NBS* indicates a risk to occupants of approximately 10 to 25 times that of an equivalent new building that just meets the minimum life safety requirements in the New Zealand Building Code.

However, you need to put that in the context of the seismic risk we expect of new buildings. The target for new buildings is around 1 in 1,000,000 chance of a fatality – a very low level of risk. This is similar to the risk of death by lightning strike, for example.

To provide another perspective, if a building is rated at 34*%NBS*, it has the same likelihood of collapse in moderate levels of earthquake shaking as a new building has under full design-level shaking.

We tolerate similar or greater levels of risks in other contexts. For example, your chance of dying in a plane crash is about 1 in 100,000. In 2016, 1 in 15,000 New Zealanders died on our roads.

Who should make the decision on continuing to occupy a building rated less than 34*%NBS*?

Decisions around continued occupancy of a building that has a rating of less than 34*%NBS* should be made by owners and occupants. These decisions need to reflect a range of risk considerations – including the low likelihood of a major earthquake occurring in the short term prior to strengthening – and are not engineering decisions.

How long does an owner have to deal with an earthquake-prone building?

The Government has put legislation in place requiring earthquake-prone buildings to be upgraded or removed, over time. For earthquake-prone buildings in Wellington, which is a high seismic-risk area, the new legislation sets a maximum time frame of 15 years for non-priority buildings. This legislated period represents the time over which Parliament considers the heightened risk can be tolerated and addressed without affecting occupancy.

Do earthquake-prone buildings present a health and safety risk?

WorkSafe New Zealand issued a policy clarification in 2018 that says if you're a Person Conducting a Business or Undertaking that owns or occupies an earthquake-prone building and you're meeting the earthquake performance requirements of the Building Act 2004, WorkSafe will not enforce to a higher standard under the Health and Safety at Work Act. It also says:

> *If a building is found to be earthquake-prone, this doesn't necessarily mean it shouldn't be occupied. The Building Act provides a period of several years for strengthening or demolition work to be undertaken. While the risk of harm to people in or around an earthquake-prone building is greater than an equivalent new building, this doesn't typically require short-term action.*

You should always encourage owners of earthquake-prone buildings to begin preparing strengthening plans to remove the earthquake-prone status within much shorter timeframes than the minimum mandated in the legislation.

What about buildings assessed at less than 34*%NBS* but not defined as earthquake prone?

Essentially the same risk considerations apply as in the answer above.

As for earthquake-prone buildings, the focus should be on addressing the issues that lead to the building's low rating within as short a time frame as is practicable.

26013

3^{rd} May 2022

Steve Crombie
Director Property & Facilities 2DHB
Capital & Coast District and Hutt Valley District Health Boards

Email: Steve.Crombie@ccdhb.org.nz

Dear Steve,

Re: Hutt Hospital Heretaunga Block DSA Peer Review - High-level review comments

We have been engaged by Hutt Valley District Health Board (HVDHB) to provide a peer review of the Detailed Seismic Assessment (DSA) of Heretaunga Block building located at Hutt Hospital. The DSA was undertaken by Aurecon Limited, their report we have reviewed is dated March 2022.

This letter summarises the high-level review we have completed to date.

High-level review

From our high-level review to date we consider:

- Aurecon's Detailed Seismic Assessment (DSA) has been carried out following good professional engineering practices with respect to approach & methodology.
- The DSA appears to have been completed using industry standard guidelines and recommendations.
- The conclusions of the DSA and the reported score of 15%NBS(IL3) appears to be reasonable if this is an IL3 building.
- This building should probably be considered IL4 as we understand it is intended for post-disaster functions. However, this will not alter the %NBS as MBIE Guidelines recommend that the minimum reported capacity should not be below 15%NBS.

Our review to date mostly focused on the DSA report and the original drawings for the building. Our review of the ETABS Model and calculations are at preliminary stages and will be ongoing. However, to date we have not identified anything in the ETABS Model and calculations that would suggest the %NBS indicated by Aurecon is not accurate.

Aurecon's DSA methodology

Aurecon have used an industry-standard computer modelling software ETABS to create a model of the primary structure of the building. This model allowed an approximate estimation of the forces & deformations in each part of the primary structure to be calculated considering the current New Zealand Earthquake Actions Standard (NZS 1170.5). Aurecon considered Heretaunga Block to be a building of High Importance (IL3 – major structure). Note we consider this building should probably be considered IL4. However, this would not alter the %NBS score if the score of Heretaunga Block as an IL3 building is 15%NBS. i.e., if the Heretaunga Block achieves 15%NBS (IL3) following the MBIE Technical Guidelines it would also achieve 15%NBS (IL4).

Aurecon appear to have accurately used the latest MBIE/NZSEE seismic assessment guidelines to assess the expected seismic performance of Heretaunga Block relative to the minimum life-safety standard required for a similar new building at the same site. Aurecon looked at the primary structural frames & walls, floor diaphragms and foundations of the building. Aurecon have also assessed secondary structural elements such as stairs and heavy precast façade panels of the building.

High-level comments on Aurecon's DSA

The structural design of Heretaunga Block was undertaken prior to the introduction of modern seismic design principles in New Zealand earthquake loading & building design standards circa in 1976. Typically, pre-1976 buildings have significantly less seismic strength and ductility capacity than that required by current design standards. In addition, Heretaunga Block has a flat slab floor slab system that was observed to perform poorly in past earthquakes.

Aurecon's DSA approach and methodology for Heretaunga Block appears reasonable. We consider the level of computer modelling & analysis undertaken by Aurecon to be appropriate for this building. Based on the results of the analyses, Aurecon appear to have assessed the significant elements of the building using industry standard assessment guidelines and have painted a credible picture of the seismic resilience of the building. Aurecon's conclusion that the building achieves a seismic rating of 15%NBS(IL3) appears to be reasonable.

A building with a seismic rating less than 34%NBS is considered to be an Earthquake-Prone Building (EPB) in terms of the Building (Earthquake-prone Buildings) Amendment Act 2016, if the rating is confirmed by Hutt City Council (the applicable Territorial Authority). Based on a high-level review of some of the critical structural weaknesses of Heretaunga Block, we believe life-safety issues are likely to manifest themselves in this building during earthquakes that are well below the 34% shaking level.

Please call if you have any queries.

Yours sincerely,

Ignatius Black
Principal
SILVESTER CLARK LTD

Interim Health New Zealand HIU

Seismic Risk Review of Heretaunga Block, Hutt Hospital

9 May 2022

1. Basis of Risk Review

This risk review summarises the outcomes of the seismic assessment of Heretaunga Block and provides commentary on the nature of the risk posed by the building. Background to %NBS ratings is also provided, along with observations on comparative risk.

This review is based on the following:

- Review of the draft Aurecon Detailed Seismic Assessment and accompanying memo
- Review of the original structural drawings
- Discussions with the technical directors of Aurecon and peer reviewer Silvester Clark
- Inspection of the building on 9 May 2022

2. Summary of Seismic Assessments

The draft Aurecon Detailed Seismic Assessment has identified several features of the building that give rise to an overall seismic rating of 15%NBS at Importance Level 3 (ie. 1,000 year return period earthquake shaking). These include:

- Columns along the east and west facades with greater flexibility than the beams;
- Precast concrete facade panel connections with inadequate movement allowance;
- Concrete floor diaphragms with limited strength to transfer horizontal loads;
- Stairs with inadequate movement allowance

The foundations and structural walls also have elements that score less than 34%NBS.

While the peer reviewers have not yet completed their analysis and report, they have indicated that they generally agree with Aurecon’s findings. Some adjustments to the assessment report are to follow the peer review and further input from myself.

3. Regulatory Status

The building has not yet been determined by Hutt City Council to be earthquake prone. This is likely to occur following submission of the final report to the Council.

As a priority building in terms of the earthquake prone buildings provisions of the Building Act, the resulting EPB notice will have an expiry date of 7.5 years following the date of the notice.

4. Observations on the Seismic Features of this Building

The building was designed in the early/mid-1970s, just prior to significant advances in seismic design codes in New Zealand. As a result, the building lacks some of the configuration and detailing of more modern structures that better enable them to resist major earthquake shaking.

The building has appreciable strength in the transverse (north-south) direction due to the presence of structural walls. These walls however lack the level of detailing required in new buildings to resist major earthquake shaking, hence the low rating for some walls.

In the longitudinal (east-west) direction the perimeter frames above first floor have a weakness due to the flexibility of the columns in relation to the beams. Some aspects of the detailing of these columns nevertheless appear to exceed code requirements of the time of design.

The floor system is cast in situ concrete, which provides the building with much greater overall integrity under strong shaking than more modern buildings with precast concrete floors. The low score for this element as a horizontal diaphragm results from some areas lacking strength to resist current design force levels. There are no questions about the vertical load carrying capacity of the floors, beams and columns.

5. Understanding %NBS Ratings

Seismic ratings are essentially a risk comparator, and relate the subject building to an equivalent new building. They are not a predictor of expected performance in a particular earthquake, as every earthquake is different in terms of location and depth of the epicentre, and the frequency of shaking.

The response of earthquake prone buildings in Wellington and Hutt to the Kaikoura earthquake provides an illustration of this. Of the more than 700 designated earthquake prone buildings at the time of the earthquake, only a very small number recorded any damage, and it is understood that none experienced structural failure.

More importantly, %NBS ratings don't represent a *specific assessment of safety*. A building with a seismic rating less than 34%NBS is not a dangerous building or necessarily in any imminent risk of failure in an earthquake. The low rating however signals that action should be taken to address the seismic vulnerabilities that the engineers have identified.

The intended outcomes of a low %NBS rating can be summarised as:

- To signal heightened risk in the event of earthquake occurrence;
- To convey the need for mitigation work to be undertaken, and sooner rather than later; and
- If the building is determined to be earthquake prone, to link this with defined statutory timeframes (refer previous page)

It is important to note that the low %NBS ratings reflect the presence of structural shortcomings and a lack of resilience in these systems, not the levels of shaking at which they might fail. The annual probability of an earthquake of sufficient strength to cause the vulnerabilities identified to result in structural failure is considered very low.

6. Risk Comparisons

A rating of less than 34%NBS indicates a risk to occupants of approximately 10 to 25 times that of an equivalent new building that just meets the minimum life safety requirements in the New Zealand Building Code. However, this needs to put in the context of the seismic risk we expect of new buildings. The target for new buildings is around a 1 in 1,000,000 chance of a fatality occurring – a very low level of risk, but nevertheless present.

This is similar to the risk of death by lightning strike, for example. Society however tolerates similar or greater levels of risk in other contexts. For example, the chance of dying in a plane crash is 1 in 100,000. In 2016, 1 in 15,000 New Zealanders died on our roads.

The notional risk that this building poses of between 1 in 40,000 and 1 in 100,000 should therefore be viewed in this wider context.

7. Discussion

Given that a low %NBS rating does not correspond to a building being dangerous or in any risk of imminent collapse, it is considered important to take time to carefully gather all relevant information before making decisions relating to continued occupancy.

The building characteristics that give rise to the low rating point to the likelihood of poor performance giving rise to a life safety hazard in significant (rare) earthquake shaking. Discussions with the lead engineers from both Aurecon and Silvester Clark indicates that they do not necessarily expect a life safety hazard to arise in more frequent moderate earthquakes.

Decisions around continued occupancy are not expected to be made with undue haste, particularly when the operational consequences of decanting a building are direct and significant. Where decanting of the building is under consideration, a specific evaluation of the direct impacts on service delivery of not continuing to use the building must be undertaken.

Part of the process of making and communicating these decisions is documenting the basis for the decision (either to continue to occupy or to leave a building). When approaching this from a Health and Safety at Work perspective, the five matters for consideration in Section 22 of the HSW Act *Meaning of Reasonably Practicable* can provide a useful framework:

(a) the likelihood of the hazard or the risk concerned occurring
(b) the degree of harm that might result from the hazard or risk
(c) what is known about the hazard or risk; and ways of eliminating or minimising the risk
(d) the availability and suitability of ways to eliminate or minimise the risk; and
(e) after assessing the extent of the risk and the available ways of eliminating or minimising the risk, the cost associated with available ways of eliminating or minimising the risk

8. Summary

The key points from this risk review can be summarised as follows:

- The building is not considered dangerous or in imminent risk of collapse
- The low rating for the building indicates a heightened risk to users in the event of a significant earthquake
- The annual probability of an earthquake of the magnitude that is likely to cause structural failure is low, and hence the overall risk to occupants (taking into account *event likelihood*, *structure vulnerability* and *consequence of failure*) over the next one to two years is considered low
- Accordingly, from an engineering risk perspective, there is considered to be no reason why this building should not continue to be used in the short-term while options to provide for the delivery of medical services in alternative locations are developed
- Any decision on whether or not to continue to use the building should take into account the direct impact of closure on the delivery of medical services

Noting that the Detailed Seismic Assessment is in draft form, I recommend that a meeting with the technical directors of Aurecon and Silvester Clark be held once the draft peer review is issued to finalise the understanding of the vulnerabilities and hence the associated risk.

Dave Brunsdon
Chartered Professional Engineer
HIU Seismic Trusted Advisor

9 May 2022

26013

11th May 2022

Steve Crombie
Director Property & Facilities 2DHB
Capital & Coast District and Hutt Valley District Health Boards

Email: Steve.Crombie@ccdhb.org.nz

Dear Steve,

Re: Hutt Hospital Heretaunga Block DSA Peer Review - High-level review comments

Based on our review to date of the Detailed Seismic Assessment details provided by Aurecon we consider that the Heretaunga Block has been correctly assessed as having a seismic capacity of 15%NBS (IL3). The Critical Structural Weakness (CSW) will have a capacity of 15%NBS (IL3).

We have reviewed Aurecon's assessment of the following items in adequate detail for use to consider the capacity they have assessed is correct:

- Precast concrete panels and connections,
- Stairs.

Both these items achieve 15%NBS (IL3). This will mean that they are both CSWs.

Failure of these items potentially poses life safety risk due to the items themselves falling. The failure of the precast panels could result in the panels, or parts of the panels, falling from the building and posing a life safety risk to those outside the building. The failure of the stairs could result in them collapsing within the stair well. This would pose a life safety risk to anyone within the stairwell at the time. Failure of the stair would also obstruct evacuation from the building after an event.

Failure of the two items mentioned in the previous paragraph will not result in the failure of primary structure that provides gravity support. i.e. would note result in the collapse of a floor/partial floor area. We consider that potential failure of the Moment Resisting Frames (indicated as achieving 15%NBS (IL3) by Aurecon) as a failure mechanism that is most likely to result in collapse type failure of the primary building structure. This is as the concrete columns that form part of the frames that provide gravity support. The assessment of these items is more involved, and our peer review of these items will take more time to complete.

Please call if you have any queries.

Yours sincerely,

Ignatius Black
Principal
SILVESTER CLARK LTD

HVDHB Seismic

Heretaunga Block Strengthening

Hutt Valley District Health Board

Reference: P520602

Revision: 1

2022-05-11

Document control record

Document prepared by:

Aurecon New Zealand Limited
Spark Central
Level 8, 42-52 Willis Street
Wellington 6011

PO Box 1591
Wellington 6140
New Zealand

T +64 4 472 9589
F +64 4 472 9922
E wellington@aurecongroup.com
W aurecongroup.com

Document control						
Report title		Heretaunga Block Strengthening				
Document code		P50602-REP-ST-001	**Project number**		P520602	
File path		Https://aurecongroup.sharepoint.com/sites/242702/5 Deliver Design/2021 Detailed Seismic Assessments/02 Heretaunga Block/06 Concept Strengthening/P520602-REP-ST-001.docx				
Client		Hutt Valley District Health Board				
Client contact			**Client reference**			
Rev	**Date**	**Revision details/status**	**Author**	**Reviewer**	**Verifier** (if required)	**Approver**
0	2022-05-11	Draft Issue	S Jones	[redacted] s 9(2)(a) OIA		S Jones
0	2022-05-11	Revised Draft	S Jones	[redacted]		S Jones
Current revision		**1**				

Approval			
Author signature		Approver signature	
Name	Sam Jones	Name	Sam Jones
Title	Principal	Title	Principal

Contents

Appendices

Figures

1 Introduction

Aurecon has completed a draft Detailed Seismic Assessment (DSA) of the Heretaunga Block, located at Hutt Hospital, Lower Hutt. The draft assessment concluded that the Heretaunga Block Building is rated at 15%NBS(IL3). This corresponds to a “Grade E” (Very High Risk) building as defined by the current 2017 Ministry of Business, Innovation and Employment (MBIE) Guidelines building grading scheme.

The assessment has been conducted in accordance with *The Seismic Assessment of Existing Buildings – Technical Guidelines for Engineering Assessments*, dated July 2017 (the Guidelines), including the updated *Section C5 – Concrete Buildings – Proposed Revision to the Engineering Assessment Guidelines,* dated November 2018. We note that this assessment is currently being peer reviewed by Silvester Clark Ltd.

The draft DSA for the building identified a number of elements within the building that score below 33%NBS (IL3). These are:

- Moment Resisting frames (Columns & Beams) – 15%NBS (IL3)
- Concrete shear walls – 30%NBS(IL3)
- Concrete floor diaphragms – 15%NBS (IL3)
- Precast concrete panels and connections – 15%NBS (IL3)
- Stairs – 15%NBS (IL3)
- Foundation system – 20%NBS (IL3)

The purpose of this report is to provide high level information to the Hutt Valley District Health Board (HVDHB) as to the quantum, and possible cost, of works to upgrade the building to a performance level more acceptable to the DHB. It is envisaged that this information will be used as part of a decision-making process for the DHB as to the future of the building

This information is provided as an outline summary of the scope of works that would be required to improve the performance of each aspect of the building noted above. Rough order costing for the work has been provided by Rider Levett Bucknall (RLB) as presented in Appendix C. [draft issue – costing is still underway]

This report does not intend to provide a “final design” or costing for the strengthening of the building. As described in the following sections, the impact of some of the proposed works will alter the response of the building to seismic shaking and this would require detailed assessment.

Strengthening options that significantly change the structural response (such as base isolation) have not been considered at this stage but may be possible, if not economically or operationally feasible, for the building.

1.1 Importance Level

Both this report and the draft DSA have been prepared on the basis that the building is to be considered an IL3 structure. We understand that a review is underway regarding the services provided in the Heretaunga block, particularly radiology, that may require the building to be considered IL4.

An increase of importance level (IL3 to IL4) would result in the loading for the building to be increased by around 40% with the added requirement for maintaining operational continuity following a 1/500 year event. Providing this level of building improvement would unlikely be feasible and certainly would not be economic. Given the functions that would drive the building to be IL4 are generally at ground floor, upgrading the whole building to suit the IL4 requirements would be excessive in terms of cost.

1.2 Feasibility and Disruption

There would be several ways to approach and programme the construction works for the proposed structural works in the building described in this report. All will cause significant disruption to the continued use of the building.

Access will be required to most areas of the building to affect the proposed strengthening, this will require strip out of internal linings and finishes, followed by reinstatement. This would include floor linings, ceilings, and wall linings in some locations. Aspects of the building such as façade elements (e.g. the windows) or ceiling grids that would need removal may not be able to be reinstalled due to being damaged when they were removed or because they are not now compliant.

In terms of the physical works, the proposed solutions will require concrete cutting and drilling throughout the building which cannot easily be mitigated in terms of noise or vibration. Typically, in commercial buildings, these works would be undertaken at night to avoid disruption to occupants, which is clearly not possible for this building.

Options of decanting 2-3 floors (or parts of floors) at once while the works were undertaken could be considered, provided the structural borne noise and vibration was acceptable. If parts of the building were to remain in use, a careful strategy would be required to maintain critical services, access and emergency egress to these areas. It would be more likely that the whole building would be required to be empty to undertake the works.

The programme to undertake the works would be dependent on the decanting strategy and whether the building was completely empty or approached in a progressive manner. If the building was empty, it would be expected that the works could be undertaken over a period of 24-36 months. If the works were undertaken on a progressive basis this timeframe would be extended significantly. Please note that these timeframes are estimates only and would need to be reviewed and discussed with a building contractor.

1.3 Building Performance and Resilience

The works described in the report are suitable to improve the life safety performance of the building. This means that the building would be able to sustain loading at the design level without collapse or damage that would constitute a life safety risk, but it would not be a resilient structure.

In order to resist this loading, a number of concrete elements of the building would be required to yield. Following a large earthquake event, the level of damage to these elements of the building would likely require the building to be evacuated and demolished.

2 Moment Resisting frame (Columns & Beams)

The assessment found that the Moment Resisting Frames (MRFs) that run along the building from Levels 2 to the roof do not have sufficient strength to resist a design level earthquake (1/1000 year event).

A critical aspect of the MRF's in the building is that the beams are very deep in relation to the concrete column sizes. This leads to a brittle failure mode where the concrete columns fail before the concrete beams, which is likely to occur at one level, referred as "column-sway" or "weak-storey".

The beams in the building include closely spaced shear reinforcement and it is believed that some ductility can be introduced into the structure if the weak storey failure mechanism is addressed.

To do so as well as keep the drift within the code limitation, the flexural capacity of the beams is suggested to be reduced while the flexural capacity of the columns on levels 1 and 2 of the building is suggested to be improved. Weakening of the deep spandrel beams can be achieved by selectively cutting some longitudinal reinforcing bars to achieve the required ductility of the frames and remediate the weak story failure mechanism.

Access will be required to the beam in order to cut the top and bottom reinforcing of the beams as shown in Figure 1. Which will likely require removal of the windows in these areas. The cuts would need to be in the order of 200mm deep and 30mm wide in order to cut the longitudinal steel. On the underside, the bottom flange would need to cut though to allow the beam to function. Where the cuts are exposed on the outside of the building they will need to be backfilled with a suitable flexible sealant.

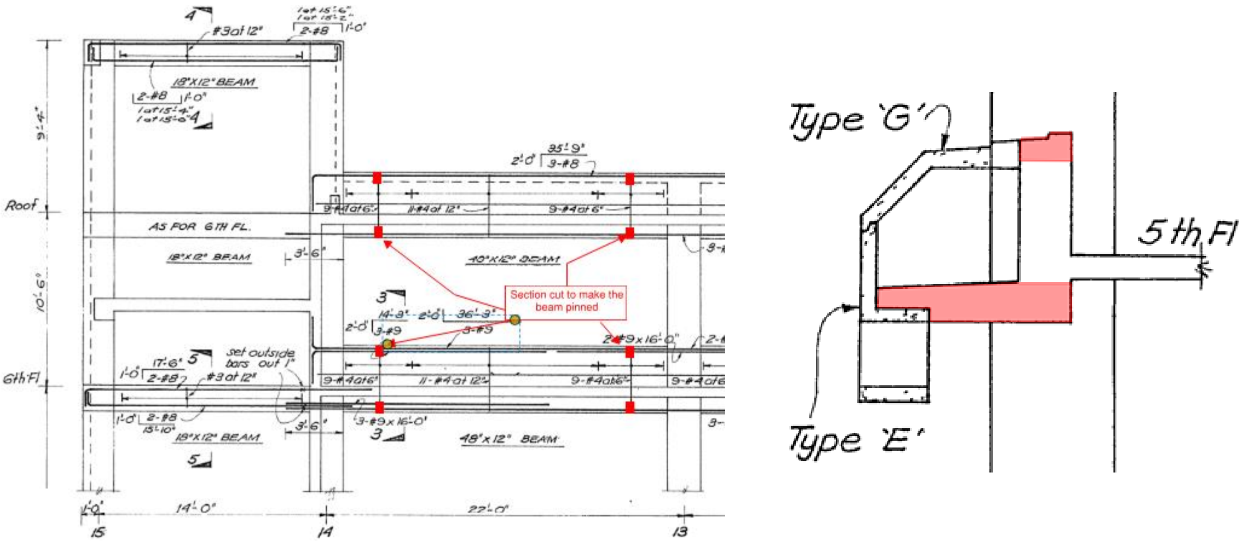

Figure 1: selective weakening of the beams by cutting the longitudinal reinforcement (example shown at the levels 6 and roof, grid 13-14)

The extent of the work required to the beams is shown as markups on the building in Figure 2 and Figure 3.

For strengthening of the columns there are several alternatives. One is to increase their dimensions with a new concrete skin to improve the flexural and shear capacity.

A second option would be to employ Fibre Reinforced Polymer (FRP) wrap or steel jackets to improve their confinement, thereby attaining a higher flexural capacity. The extent of this work is shown in Figure 4

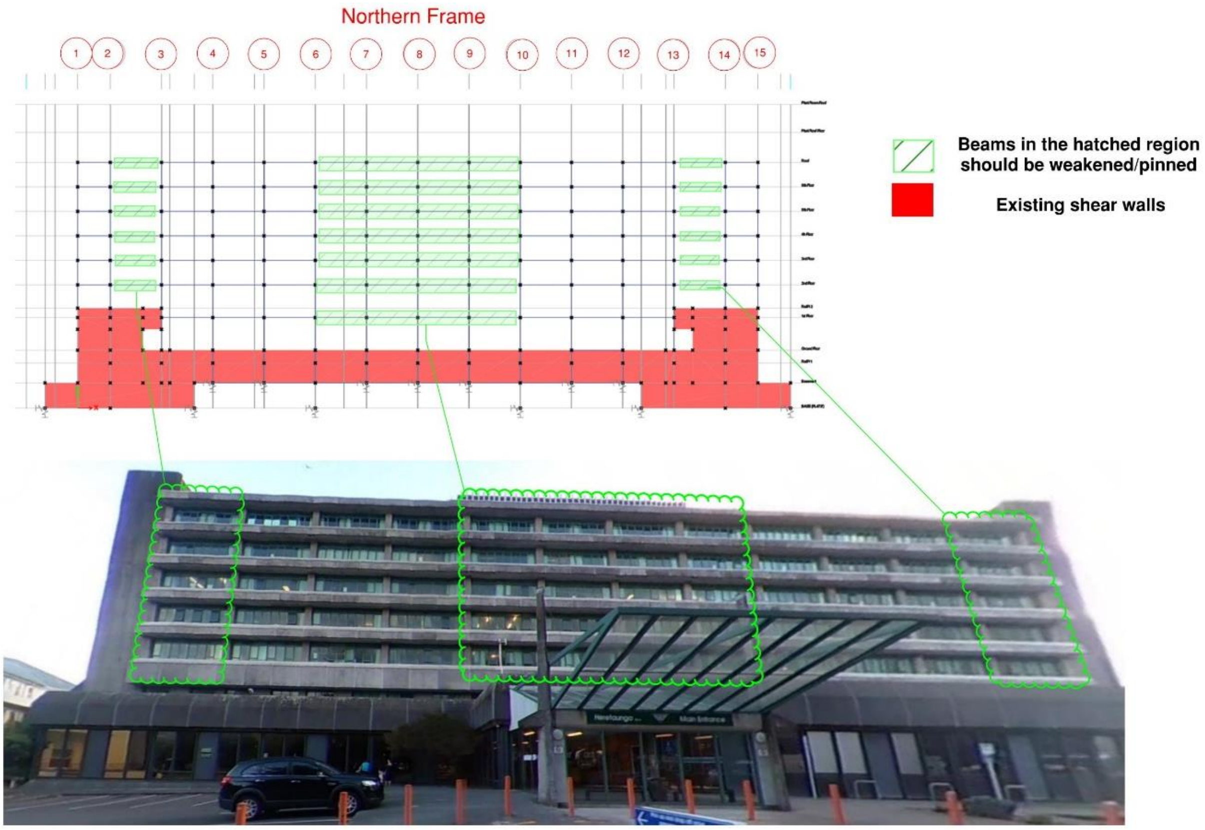

Figure 2: Extent of beams on Northern Facade

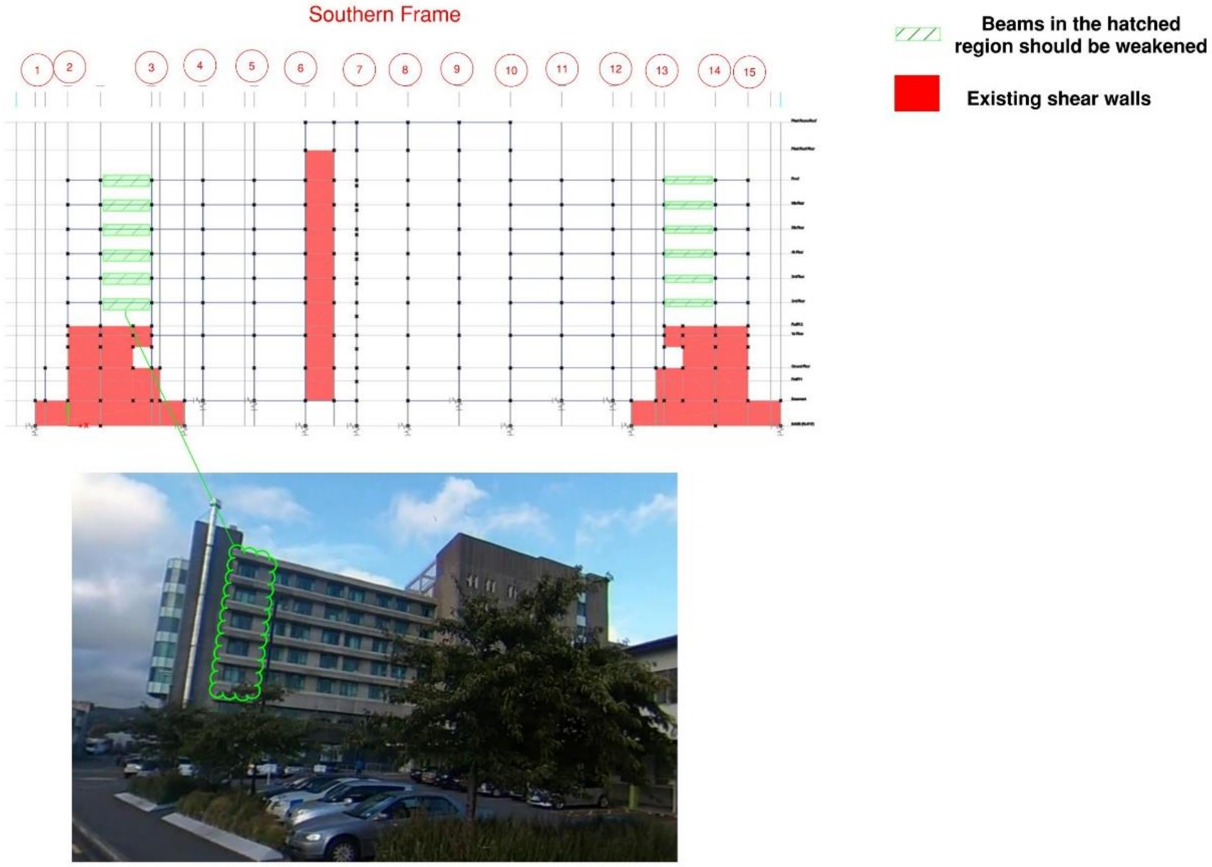

Figure 3: Extent of beams on Southern Facade

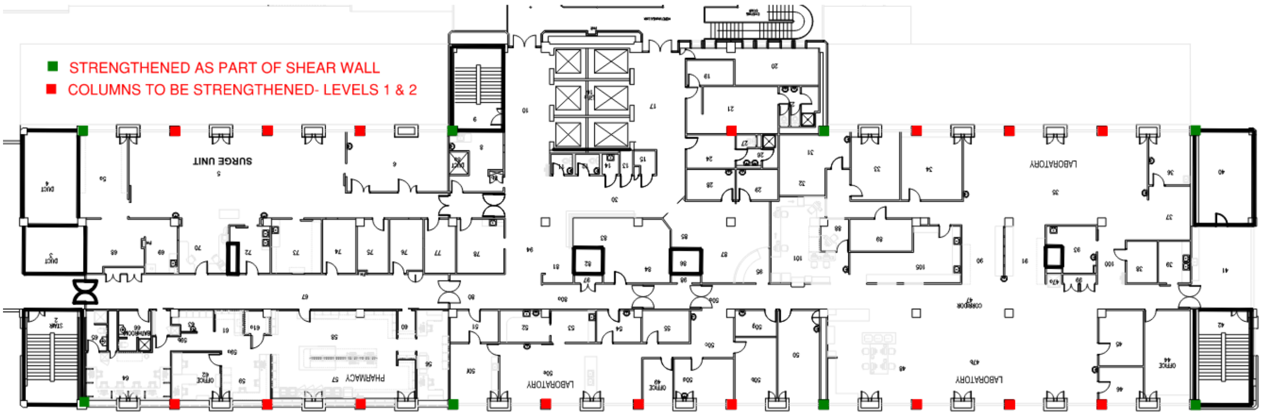

Figure 4: Extent of Column strengthening – Levels 1 and 2

3 Concrete Shear walls

The shear walls that form the lateral load resisting system in the transverse direction of the building are expected to fail in bending during a design level earthquake. The walls with the lowest capacity are those on levels 3 and 4 of the building.

The proposed strengthening for these walls would be based around increasing the capacity of the walls up their height, as well as providing sufficient detailing to “force” the plastic hinge to form at the base of the walls, thus allowing a ductile building response.

The flexural and shear capacity of the walls could be improved by increasing the wall thicknesses throughout their height to increase both flexural and shear capacity. Additional detailing would also be required between ground floor and the underside of level 2 to provide a ductile response.

The strengthening could be achieved in a number of ways.

1. Adding concrete cross section with new reinforcing on one or both sides of the walls
2. Adding steel plates on both sides of the walls, bolted through the walls.

At this stage we would suggest allowing for the addition of 10mm steel plates, 200mm wide at a spacing of 300mm (100mm clear between) up the height of the walls indicated. Allow for M20 bolts at 100mm centres in for the first two levels and at 200mm centres above this. Refer Figure 5.

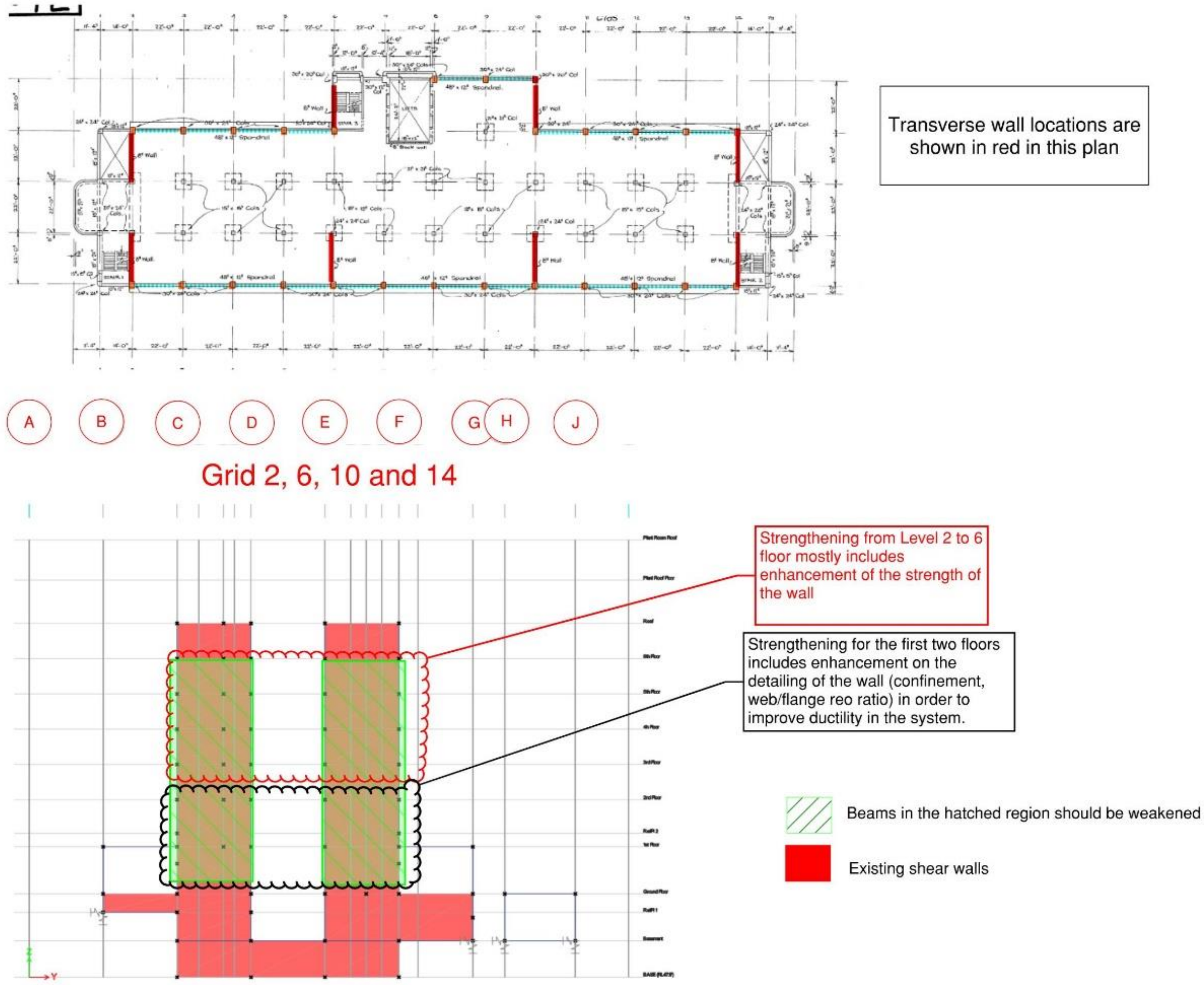

Transverse wall locations are shown in red in this plan

Strengthening from Level 2 to 6 floor mostly includes enhancement of the strength of the wall

Strengthening for the first two floors includes enhancement on the detailing of the wall (confinement, web/flange reo ratio) in order to improve ductility in the system.

▨ Beams in the hatched region should be weakened

🟥 Existing shear walls

Figure 5: Wall strengthening extent

4 Concrete floor diaphragm

Horizontal floors of buildings have generally two main roles: (a) supporting the gravity loads on the floors and (b) acting as a diaphragm to transfer earthquake loads to the vertical elements. While the concrete floors have sufficient capacity to support the gravity loads, the floors at roof level, first floor and ground floor have been found to have insufficient capacity to transfer earthquake loads to the vertical elements.

At these floors, there are transfers of load through the building into different lateral load resisting systems. These transfers result in stress concentrations in the floor slabs that exceed the tension capacity of the reinforcement.

It is noted that by undertaking the works for the shear walls and moment frames described in this report, the ductility capacity of the building can be increased, thereby reducing the seismic demands. This will likely assist in reducing the diaphragm forces and improve the NBS% rating for these elements.

Despite this, it is likely that improvement of the diaphragms will still be required. This can be achieved by the addition of tension elements on the ground, first floor and roof. This may be achieved by installation of Fibre Reinforced Polymer (FRP) or structural steel strips to enhance the diaphragm tension capacity in critical areas. Recent experience is that the industry is moving towards the installation of steel strips as being the preferred methodology for diaphragm improvement.

The extent of improvement required, based on the current assessment is provided in Appendix B.

Within these zones we would recommend allowing for the installation of 6mm Steel plate to the top of the floor, in 600mm hit and miss strips. The plates are to be fixed in place with countersunk M10 concrete screw anchors 100mm long at 200mm centres in both directions.

5 Precast concrete panels and connections

The existing connections between the precast concrete cladding panels and main structure do not allow for any lateral movement of the building. Our assessment determined that the connections will fail before the precast panels, which could result in the heavy concrete panels falling off the building and would pose a life-safety hazard for people nearby. The area affected will be in close proximity to the building, however, the exact extent of the fall zone is not easily quantifiable.

There are generally 2 options to consider for remediation of precast cladding panels.

The first option would be to provide new panel connections that allow for movement of the panels. This option would require access to the back of every panel in the building, installation of new brackets, and then cutting free of the existing panels. As the current connections are largely cast in there would be significant work required in cutting free the panels that we do not believe to be feasible. Refer to Figure 6.

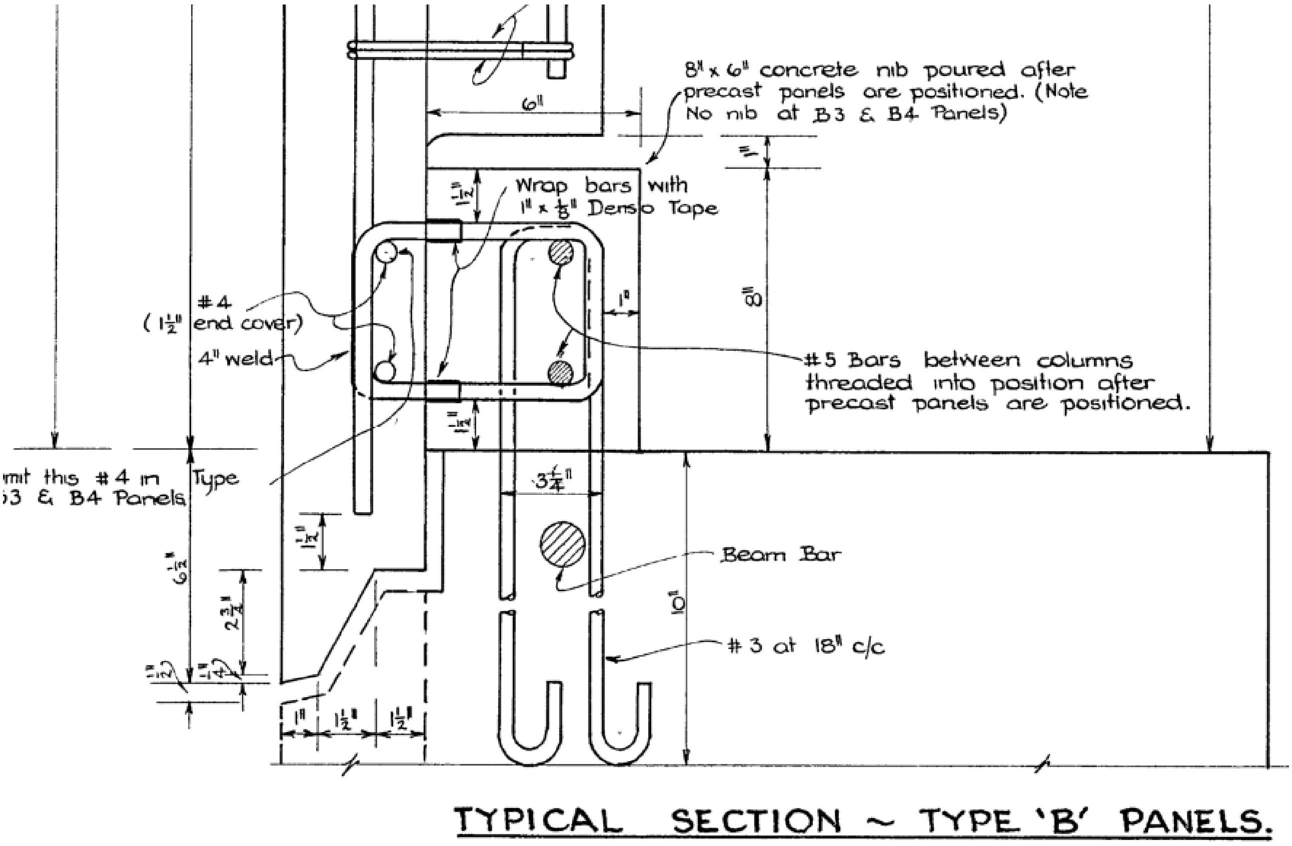

Figure 6: Typical Panel Connection

The second option would be to remove the panels and replace them with light weight cladding. This would eliminate the risk of panel failure entirely. Access would likely be required to the back of each panel zone to provide protection while the panels are removed, although we would envisage most of the removal to be undertaken from outside the building.

The extent of precast panels on the building are included as Appendix A.

6 Stairs

The precast stair beams are connected to the in-situ landings with cast-in reinforcing bars. The landings are also rigidly connected to the surrounding concrete walls and do not allow for lateral movement of the building. This means that they are likely to attract force under earthquake loading and fail in a potentially brittle manner.

To avoid this type of failure, allowance for movement must be provided. We would propose to do this by detaching the stairs from the primary structure at the mid-landings and providing a secondary gravity support system. This is described in Figure 7, Figure 8 and Figure 9.

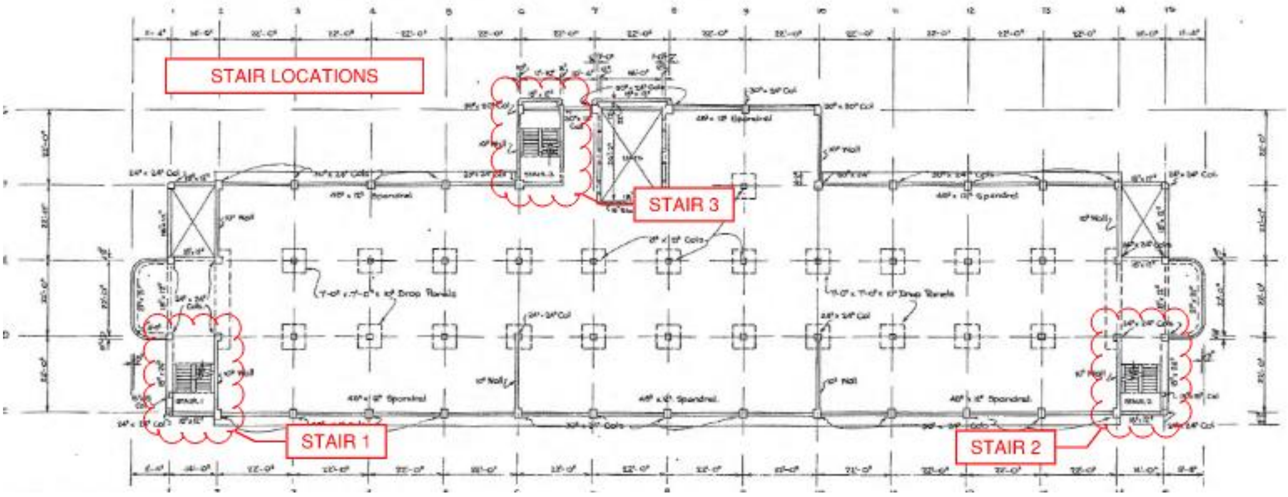

Figure 7: Stair locations

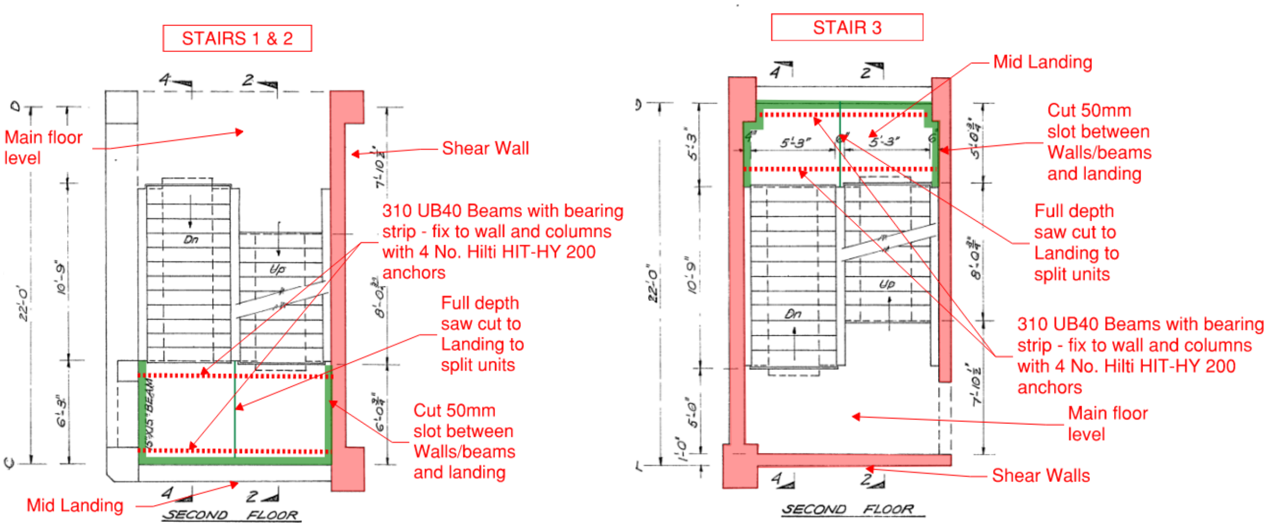

Figure 8: Stair repair details

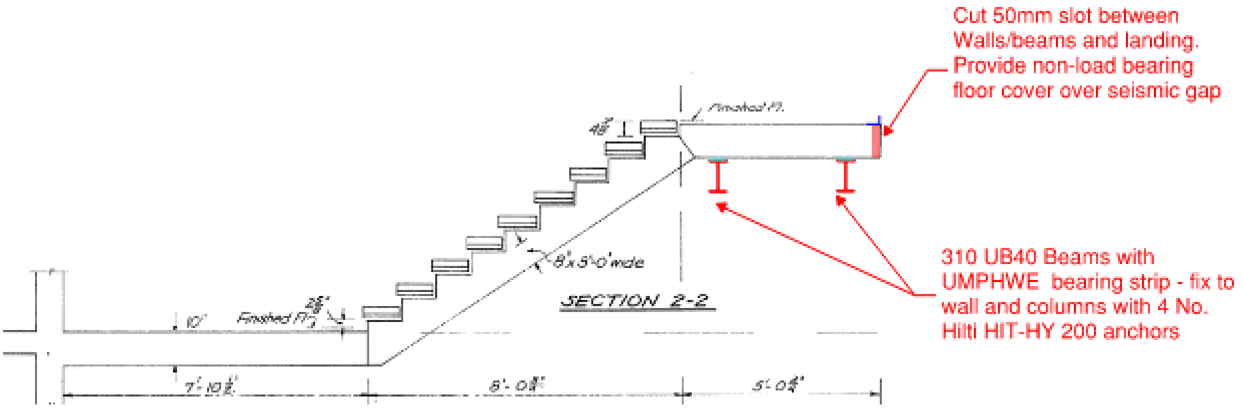

Figure 9: Typical stair section

7 Foundation system

It should be emphasised that the geotechnical desktop study was undertaken based on limited existing ground investigation data near the site of the Heretaunga Block. No site-specific ground investigation was completed as part of this study.

The investigation and review of the available geotechnical information has revealed that the soil below the structure is susceptible to liquefaction due to the presence of loose sands and ground water. As inferred from the name “liquefaction”, the soil would behave more like a liquid rather than a solid showing minimal stiffness and strength at the time of a design level earthquake.

Under liquefaction, the lateral strength of the piles was adversely affected which contributes to the poor %NBS rating of the foundation. This failure is likely to result in a softening of the building response, which may reduce the impact of the earthquake of the superstructure of the building but would also result in permanent lateral and vertical displacement of the building.

Improvement on the performance of the foundation may be achieved by undertaking site-specific investigations, which could provide further information around the site’s susceptibility to liquefaction. Furthermore, more information can be acquired on the lateral and vertical capacity/stiffness of the piles.

In conjunction with remediations to other elements of the building, the effects of the updated ductility capacity of the building should be considered on the foundations; an increase in ductility results in lower seismic demands, which may be beneficial to the performance of the foundations.

Should improved foundation performance be required, this would likely need to be in the form of ground improvement with jet grouting. There are two types of jet grouting – cementitious and engineered resin. We would suggest that the resin option would be preferred at it is an inert substance and more likely to be acceptable for use near the aquifer, although Hutt City Council have approved cementitious grouting in the Hutt City CBD in the past.

Jet grouting densifies the soil by injecting an expanding polyurethane resin mix (or highly viscous cement grout) into the ground.

Injection tubes are driven into the ground at regular intervals, and the grout materiel is injected into the target treatment zone to create the densified soil matrix. The expansion of the injected material for resin grouting, or the pressure at which a cementitious grout is pumped, compacts the adjacent soils due to new material being introduced into a relatively constant soil volume. This can eliminate the risk of liquefaction in the upper layers of the soil and improve foundation performance.

Appendix A - Extent of Precast Panels

PRECAST PANEL LAYOUTS

NORTH WEST ELEVATION

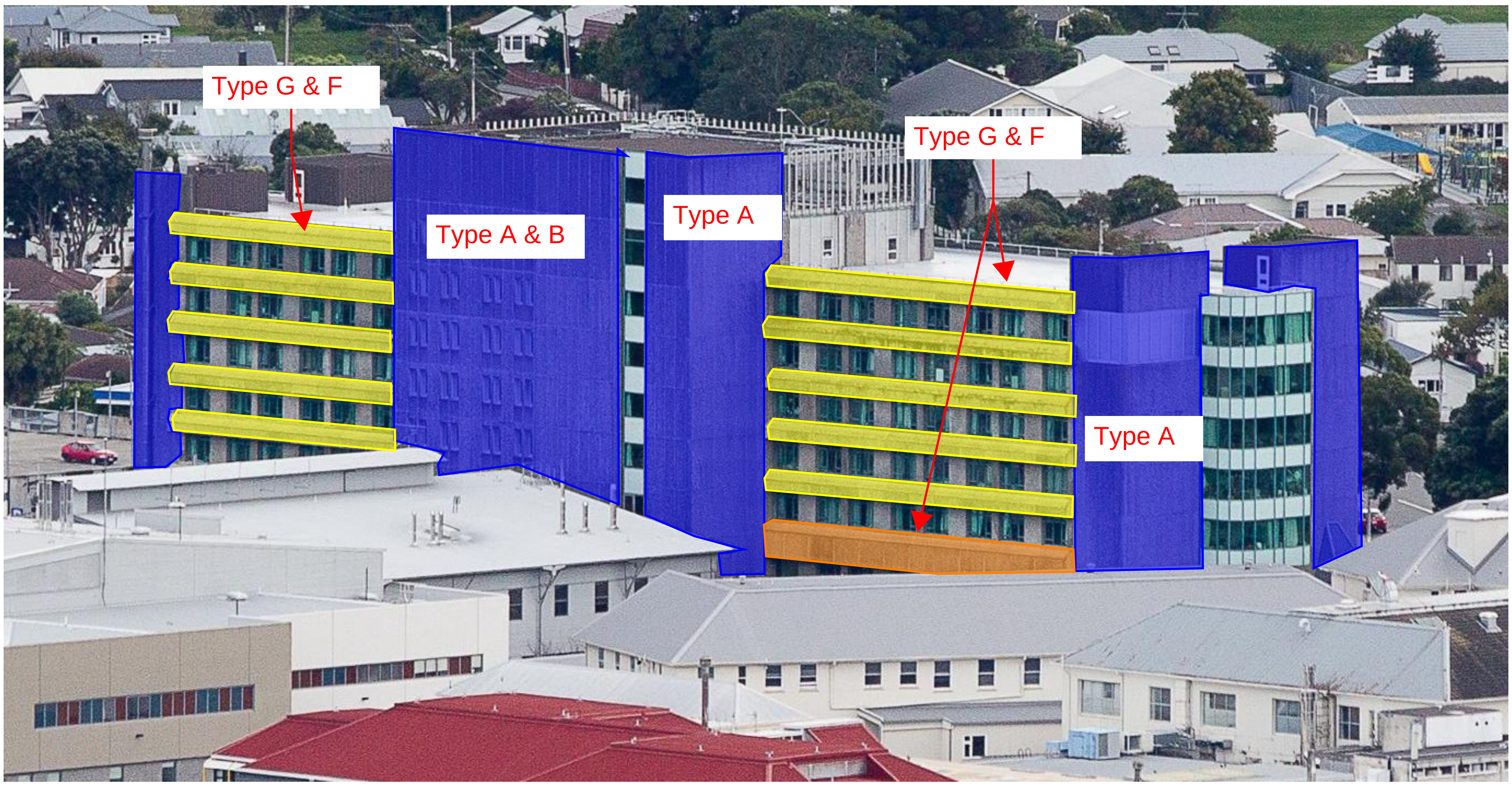

SOUTH EAST ELEVATION

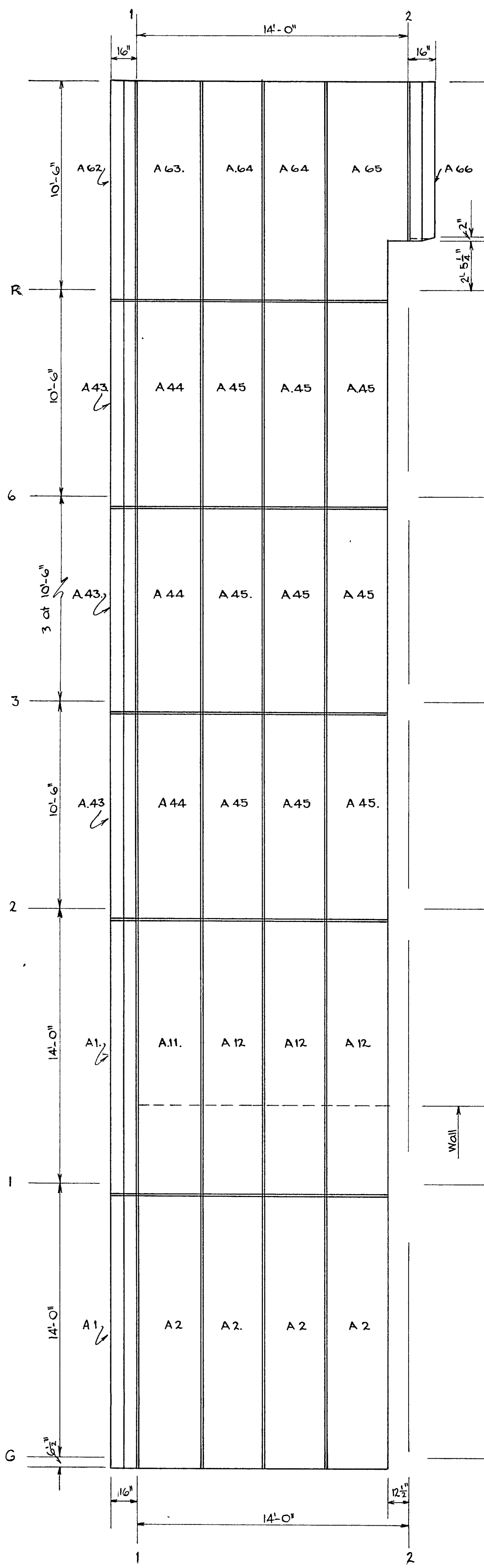

ELEVATION ON GRID C 1 TO 2.
GRID F 14 TO 15 SIMILAR.

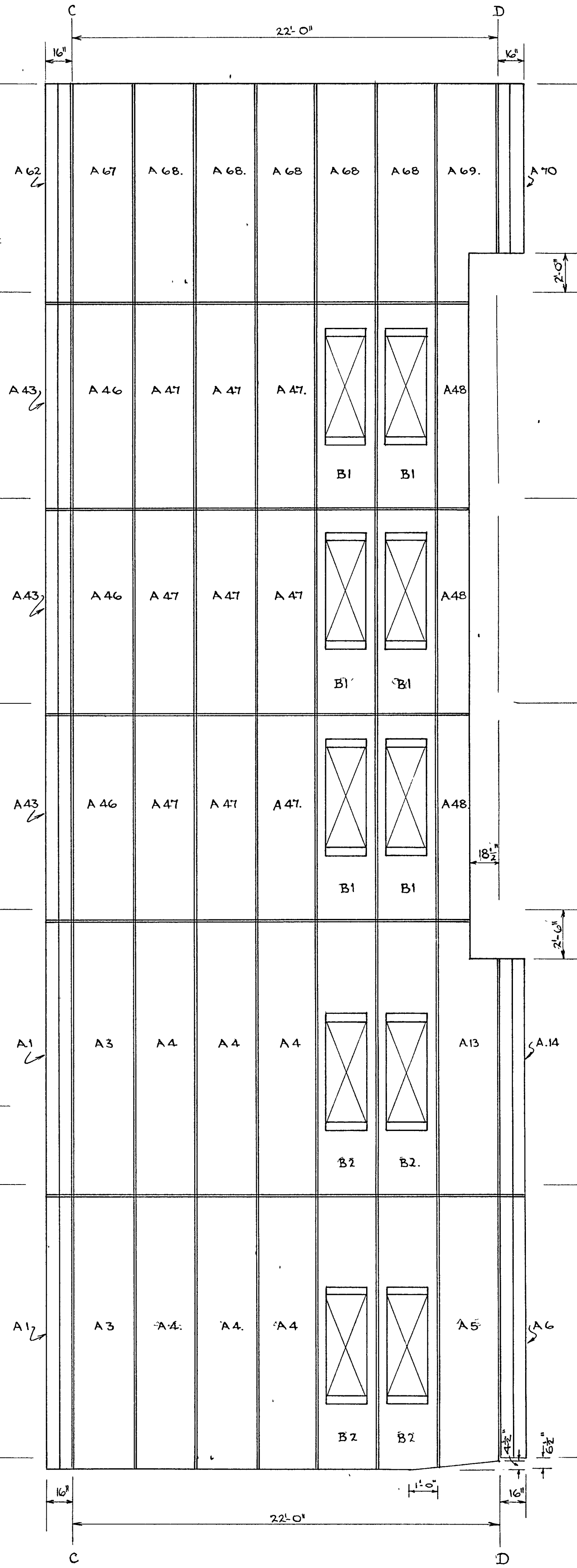

ELEVATION ON GRID 15 C TO D.

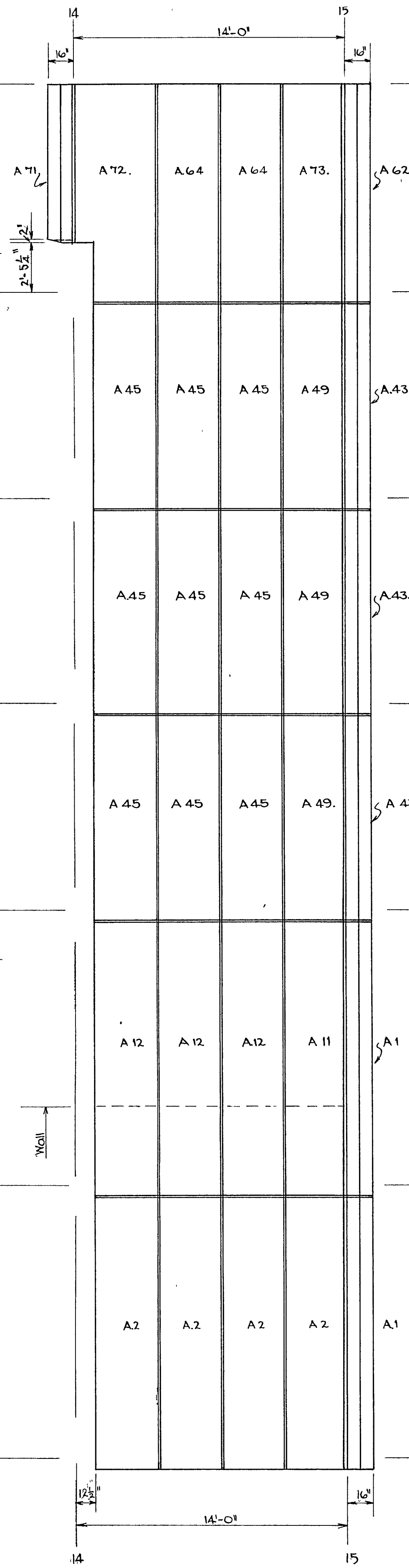

ELEVATION ON GRID C 14-15.

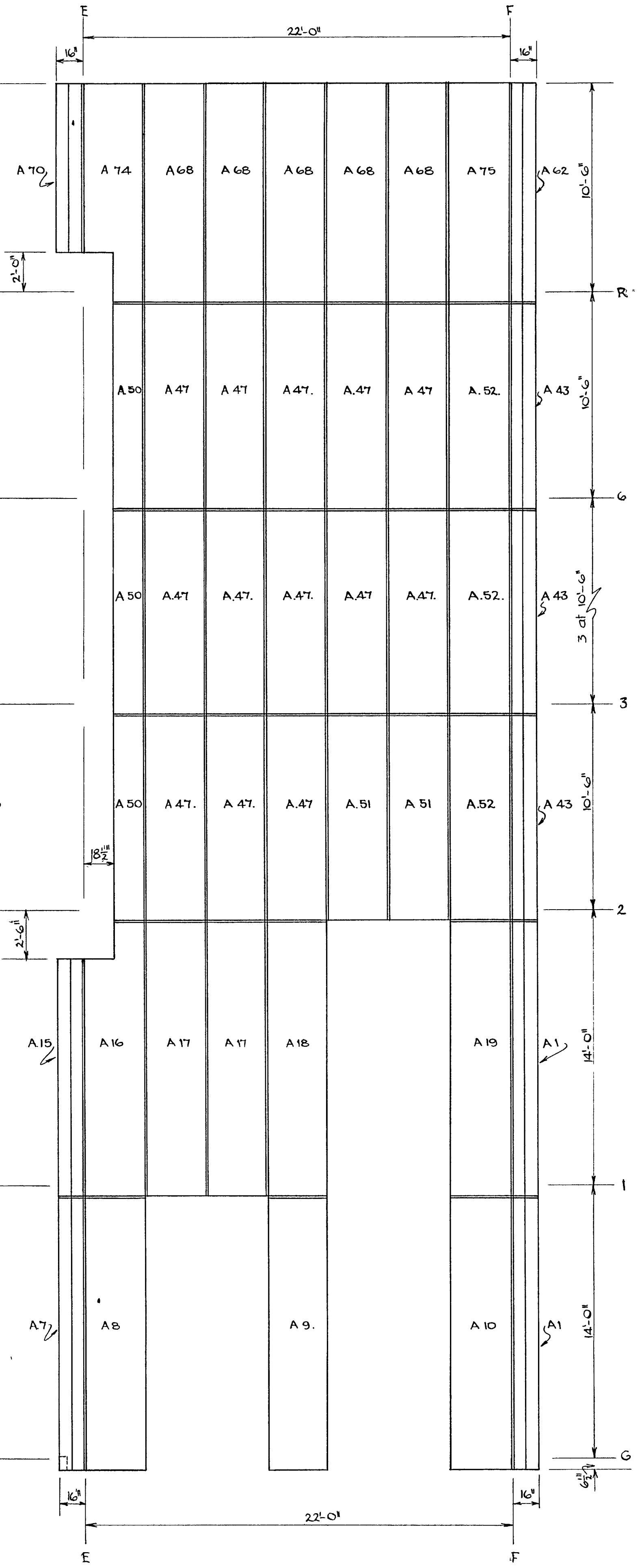

ELEVATION ON GRID 15 E TO F.

PRECAST PANEL DRAWINGS

Job No **1848.** Dwg No **S.65.** Stage **2**

Notes

Do not scale Use figured dime
Report any discrepancy to th
architect before proceeding

Job No **1848.** Dwg No **S.65.** Stage **2**

ELEVATION OF PREC
PANELS TYPE 'A' & TY
GRID C, GRID F 14 TO
GRID 15.

Designed EKC.	Traced:
Drawn EKC & RBB	Checked E
Date JULY 1974	Scale ¼" = 1'-

WELLINGTON HOSP
BOARD
HUTT HOSPITAL
CLINICAL SERV
AND WARD BL

HAUGHTON AND MAIR
ARCHITECTS
THE TERRACE
WELLINGTON N Z

EDWARDS, CLENDON & PARTN
CONSULTING ENGINEERS,
48 HOBSON ST,
WELLINGTON.

Revisions

THIS is one of the Drawings ref
AGREEMENT signed by us thi
of 1 OCT 1975 19

EMPLOYER
WITNESS
CONTRACTOR DOWNER and CO.
WITNESS R Hana

Job No **1848.** Dwg No **S.65.** Stage **2**

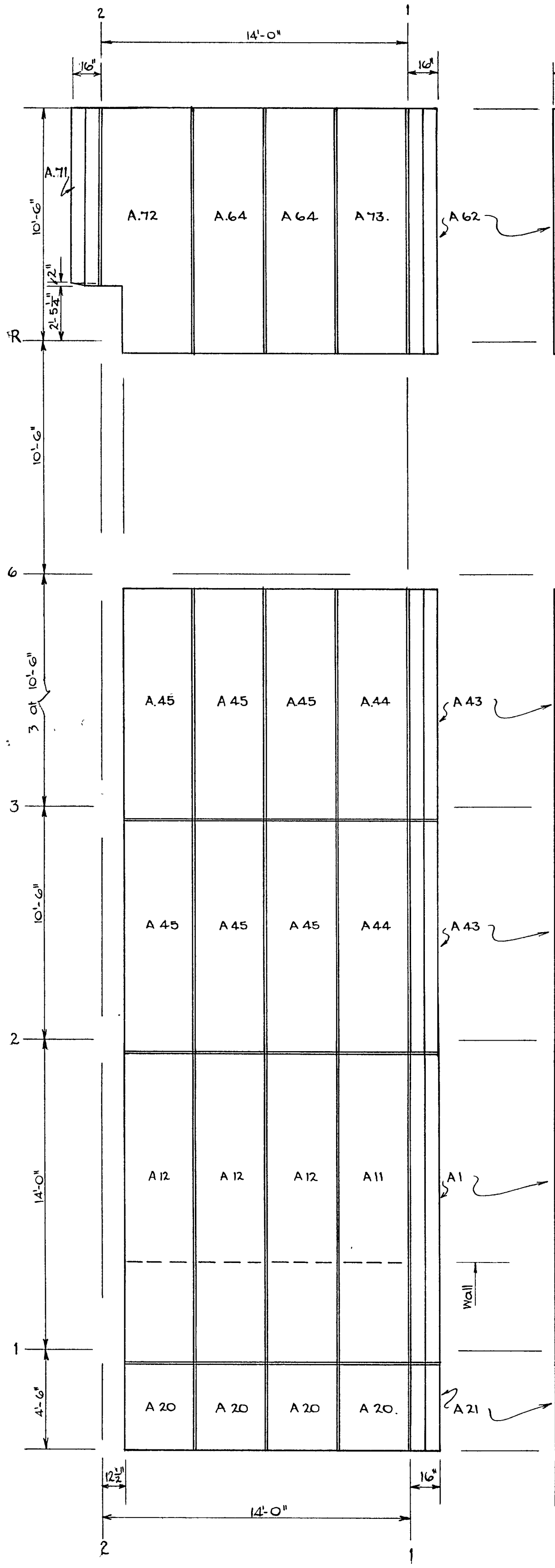

ELEVATION ON GRID F 2 TO 1.

ELEVATION ON GRID 1 F TO E.

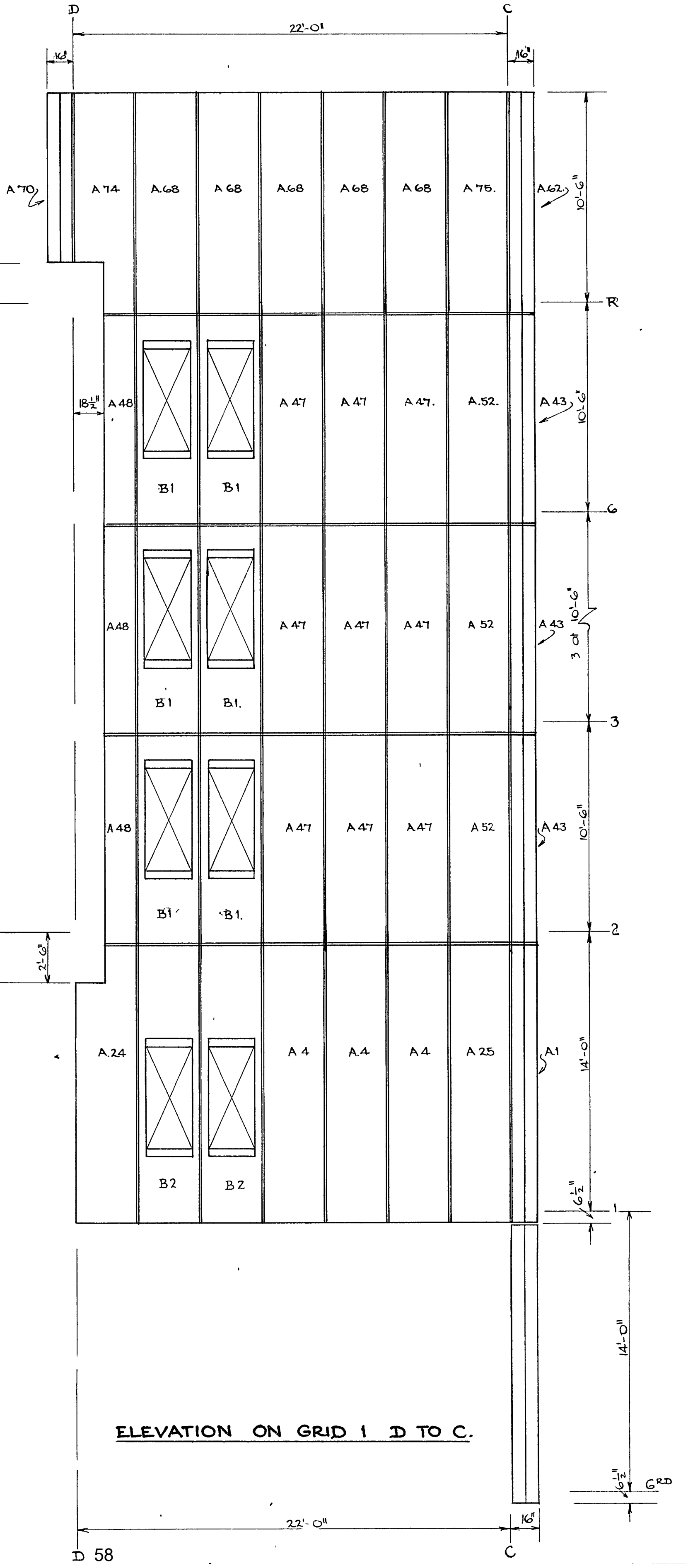

ELEVATION ON GRID 1 D TO C.

PRECAST PANEL DRAWINGS

Job No
1848.
Dwg No
S.66.
Stage
2.

Notes

Do not scale Use figured dimen
Report any discrepancy to the
architect before proceeding

Job No
1848
Dwg No
S.66.
Stage
2.

ELEVATION OF
PRECAST PANELS
TYPE 'A' & TYPE 'B'
GRIDS 1 & F.

Designed EKC	Traced JON
Drawn EKC & RBB	Checked
Date JULY. 1974.	Scale ¼" =

WELLINGTON HOSP
BOARD
HUTT HOSPITAL
CLINICAL SERV
AND WARD BL

HAUGHTON AND MAIR
ARCHITECTS
THE TERRACE
WELLINGTON N Z

EDWARDS, CLENDON & PARTN
CONSULTING ENGINEERS,
48 HOBSON ST,
WELLINGTON

Revisions

THIS is one of the Drawings refe
AGREEMENT signed by us this
of - 1 OCT 1975 9

EMPLOYER

WITNESS

CONTRACTOR DOWNER and CO. L

WITNESS

Job No
1848.
Dwg No
S.66.
Stage
2.

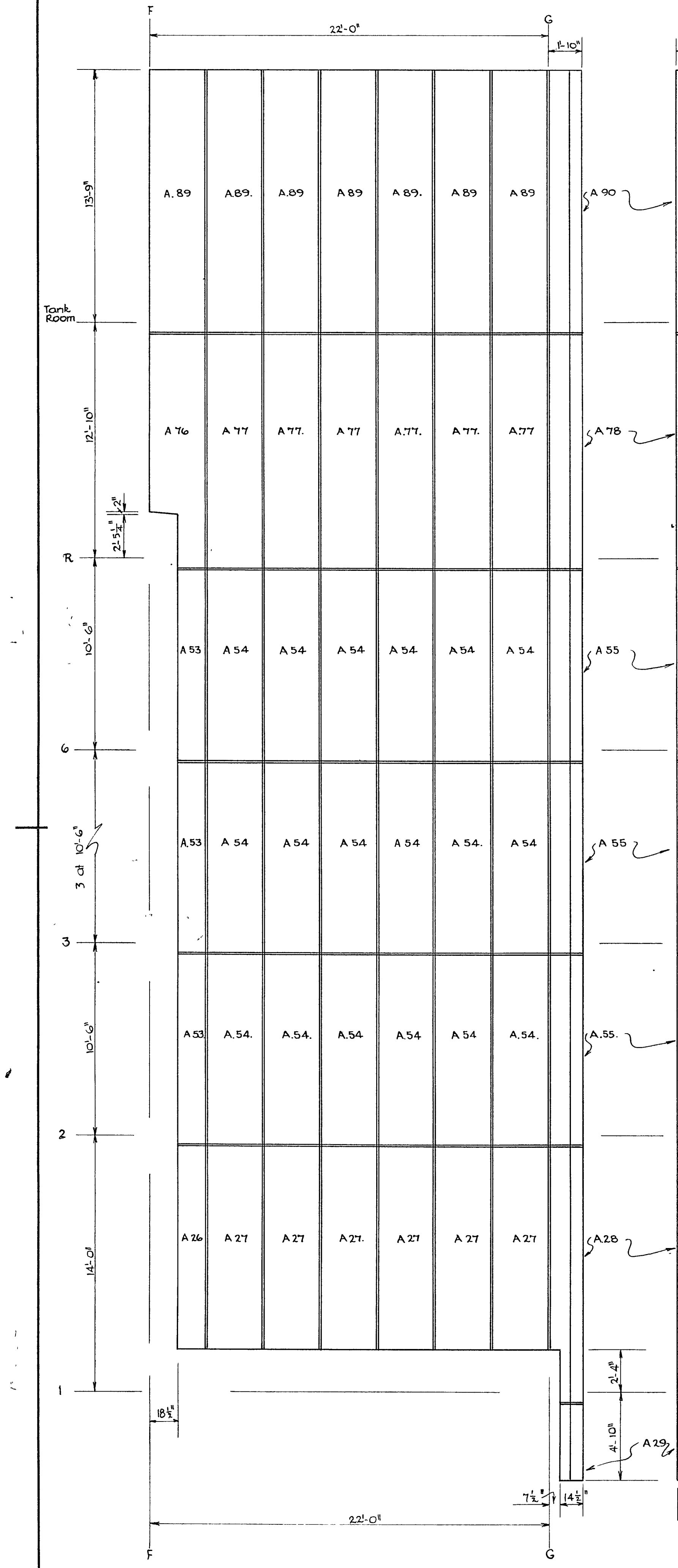

ELEVATION ON GRID 10 F TO G.

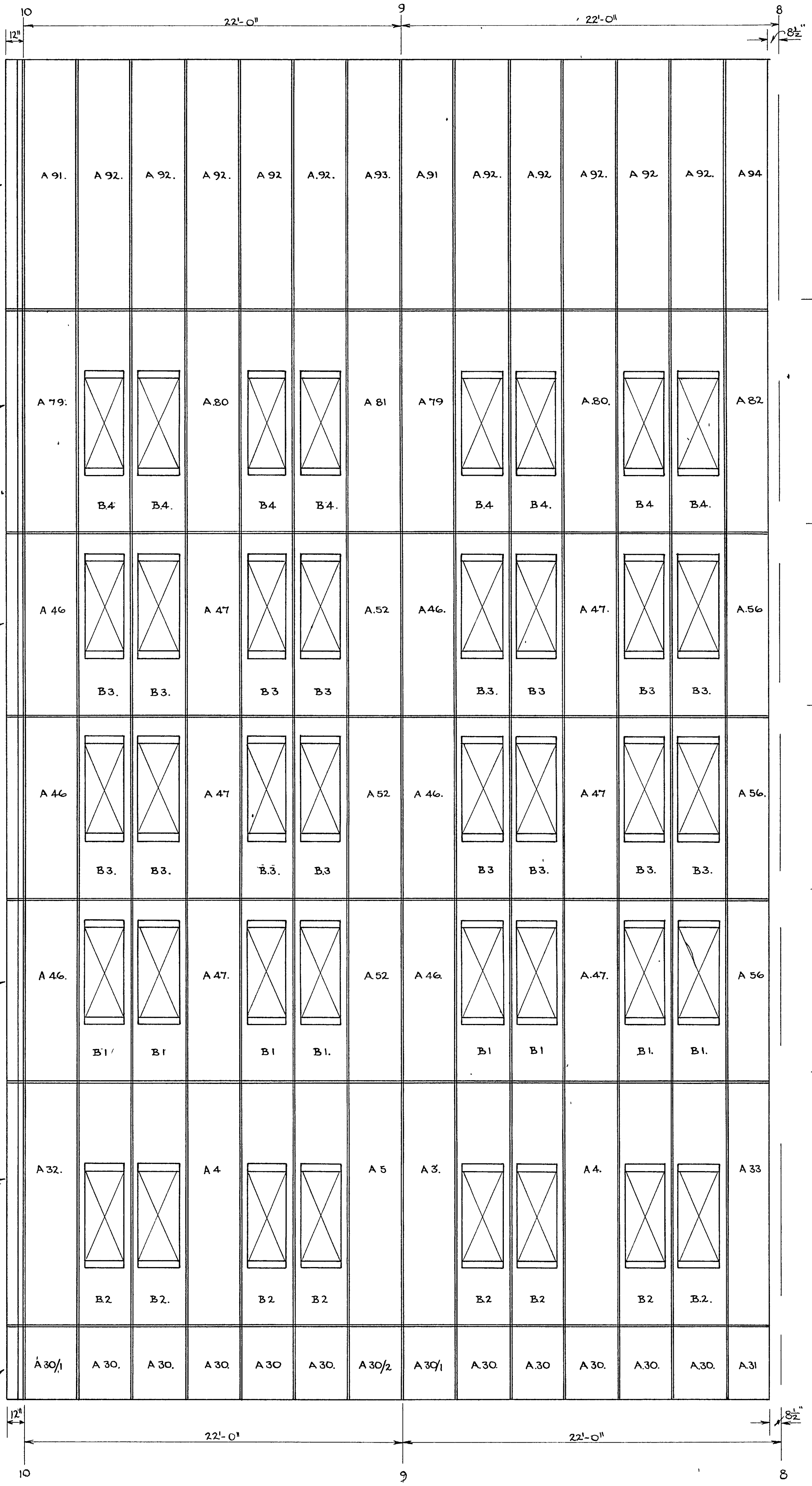

ELEVATION ON GRID G. 10 TO 8.

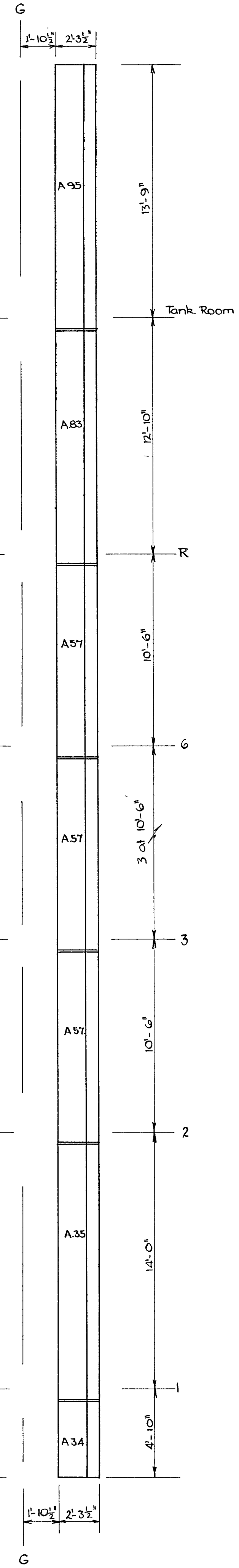

ELEVATION ON GRID 8.

PRECAST PANEL DRAWINGS

Job No	Dwg No	Stag
1848.	S.67.	

Notes

Do not scale Use figured dim
Report any discrepancy to
architect before proceeding

Job No	Dwg No	Stag
1848.	S.67.	

ELEVATION OF PRE
PANELS TYPE A
TYPE B GRIDS G,
& 8.

Designed: E.K.C	Traced.
Drawn E.K.C & R.B.B	Checked
Date JULY 1974	Scale ¼" =

WELLINGTON HOS
BOARD
HUTT HOSPITAL
CLINICAL SERV
AND WARD B

HAUGHTON AND MAIR
ARCHITECTS
THE TERRACE
WELLINGTON N Z

EDWARDS, CLENDON & PAR
CONSULTING ENGINEERS,
48 HOBSON ST.,
WELLINGTON.

Revisions

THIS is one of the Drawings re
AGREEMENT signed by us th
of - 1 OCT 1975 19

EMPLOYER
WITNESS
CONTRACTOR DOWNER and CO
WITNESS

Job No	Dwg No	Stag
1848	S.67.	

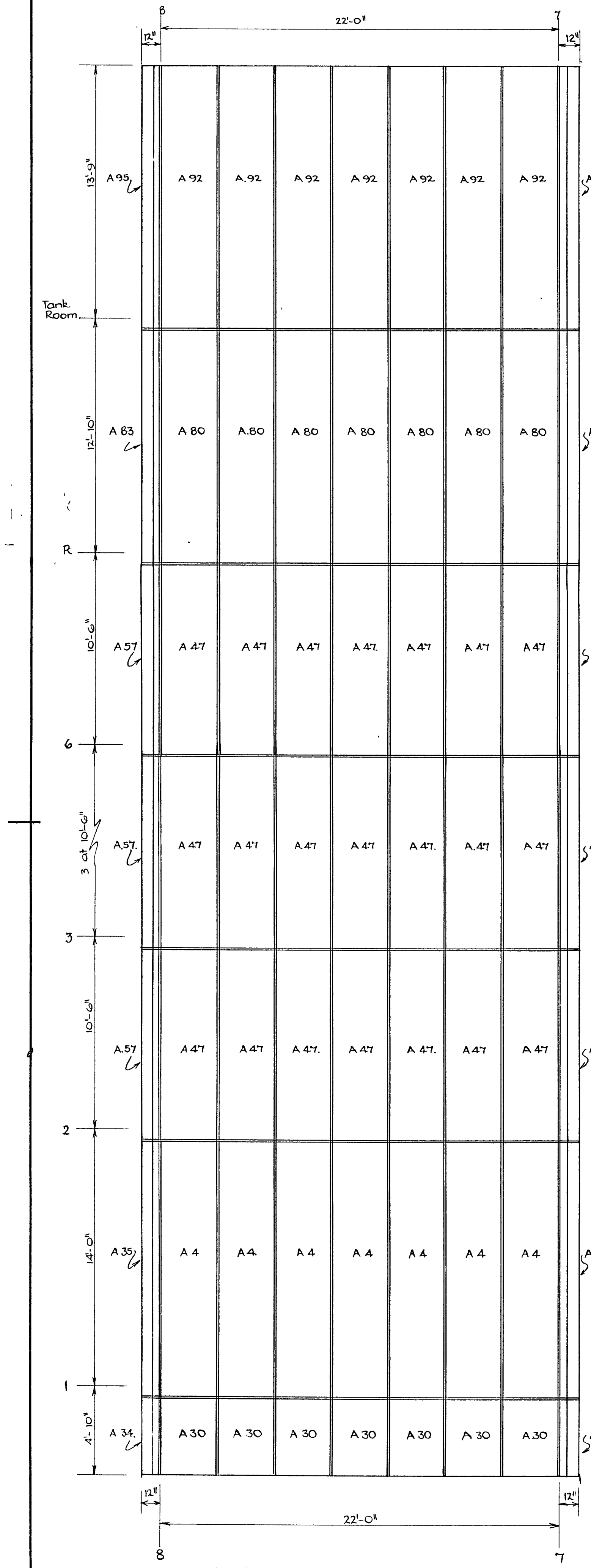

ELEVATION ON GRID G 8 TO 7.

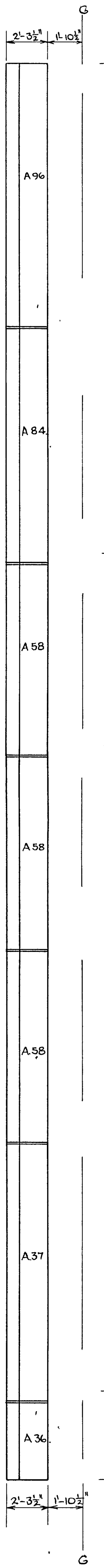

ELEVATION ON GRID 7.

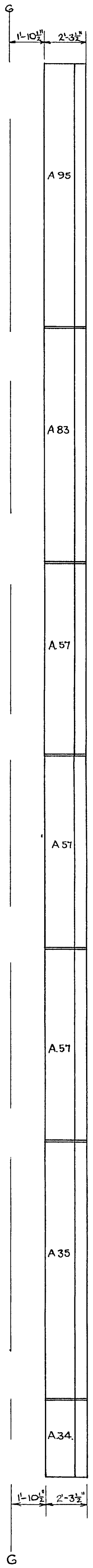

ELEVATION OF GRID 6-7.

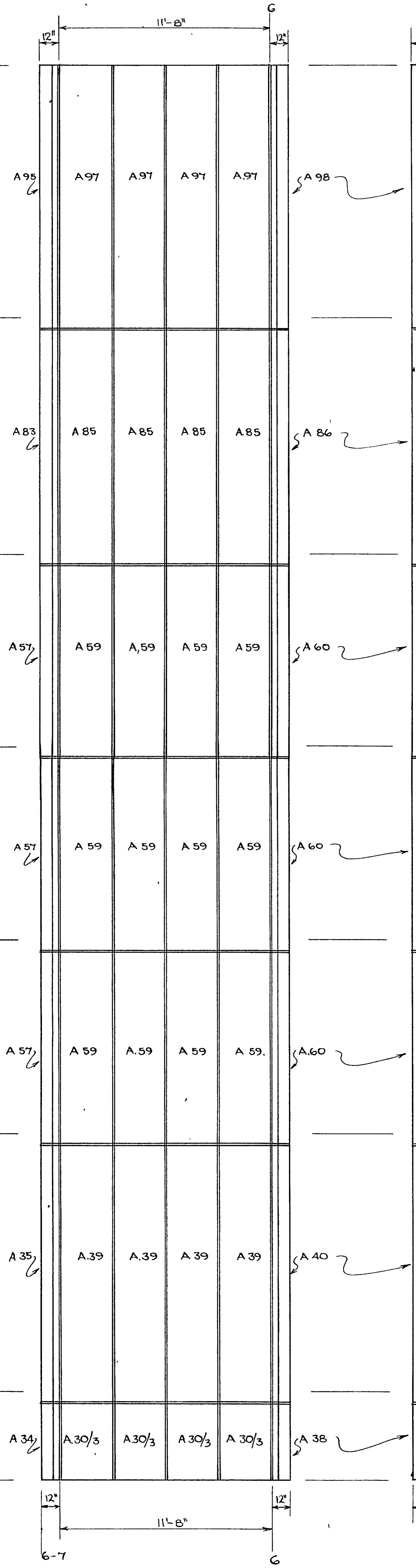

ELEVATION ON GRID G 6-7 TO 6.

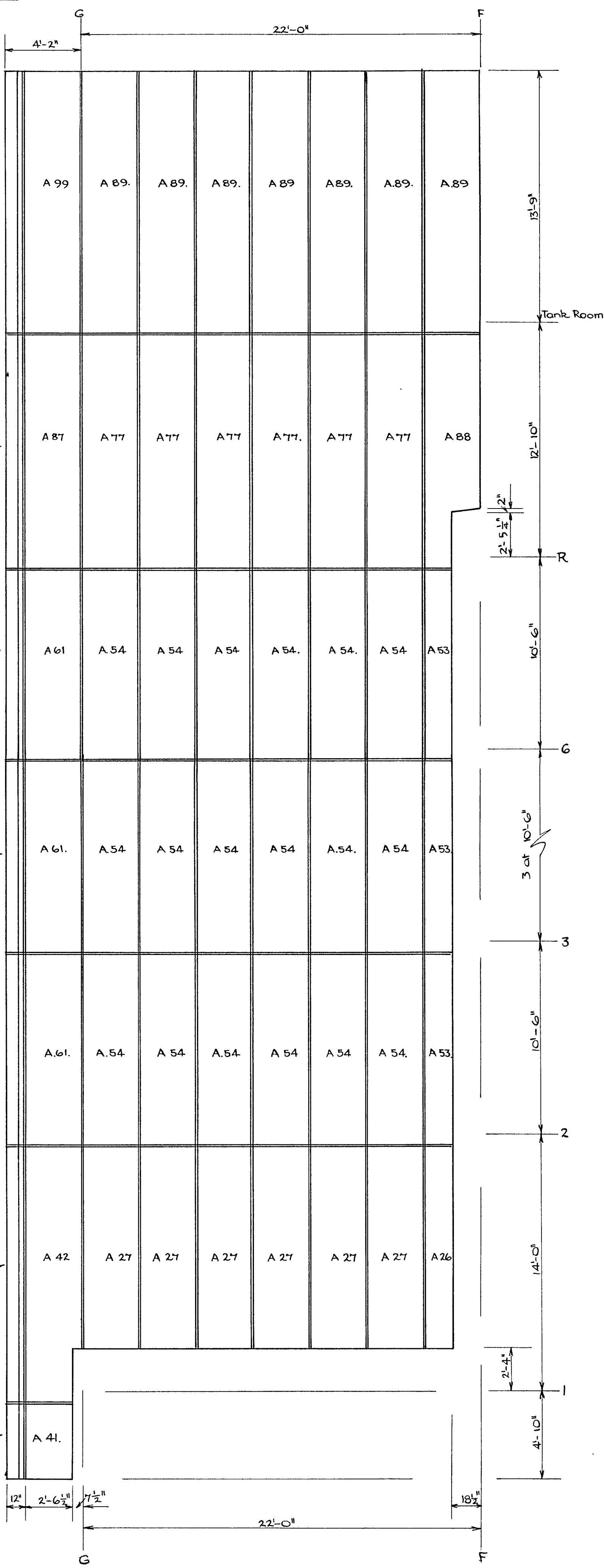

ELEVATION ON GRID 6 G TO F.

Job No 1848. | Dwg No S.68. | Stag 2

Notes

Do not scale Use figured dim
Report any discrepancy to t
architect before proceeding

Job No 1848. | Dwg No S.68. | Stag

ELEVATION OF PRE
PANELS TYPE A ON
G(6 TO 6-7) & 7 TO
6, 7 & 6-7.

Designed E.K.C.
Traced
Drawn E.K.C. & R.B.B.
Checked
Date JULY 1974
Scale ¼" =

WELLINGTON HOS
BOARD
HUTT HOSPITAL
CLINICAL SERV
AND WARD B

HAUGHTON AND MAIR
ARCHITECTS
THE TERRACE
WELLINGTON N Z

EDWARDS, CLENDON & PA
CONSULTING ENGINEERS,
48 HOBSON ST.
WELLINGTON.

Revisions

THIS is one of the Drawings re
AGREEMENT signed by us th
of 1 OCT 1975 19

EMPLOYER

WITNESS

DOWNER and CO.
CONTRACTOR

WITNESS

Job No 1848. | Dwg No S.68. | Sta 2

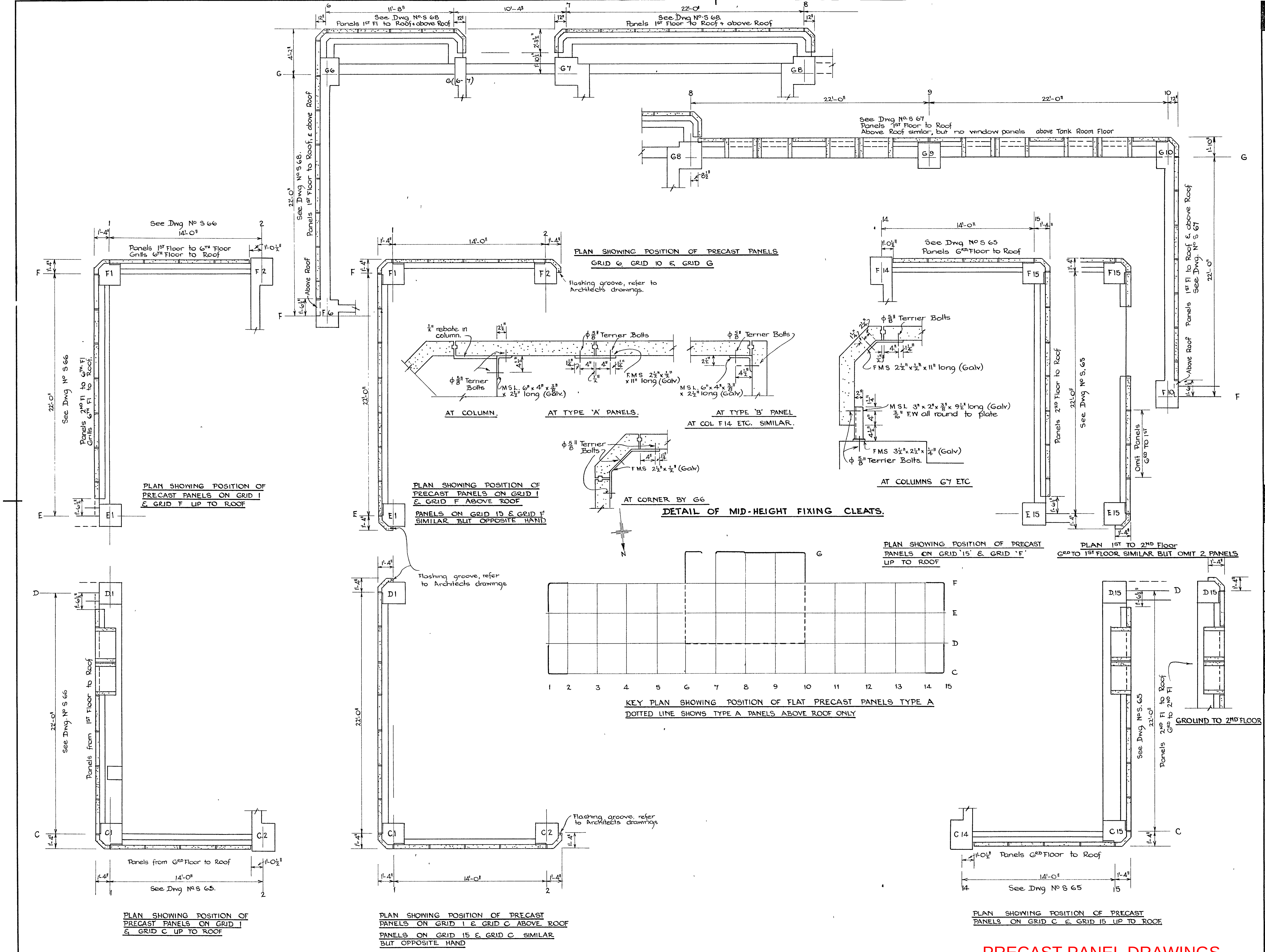

PLAN SHOWING POSITION OF PRECAST PANELS GRID G, GRID 10 & GRID G

PLAN SHOWING POSITION OF PRECAST PANELS ON GRID 1 & GRID F UP TO ROOF

PLAN SHOWING POSITION OF PRECAST PANELS ON GRID 1 & GRID F ABOVE ROOF

PANELS ON GRID 15 & GRID F SIMILAR BUT OPPOSITE HAND

DETAIL OF MID-HEIGHT FIXING CLEATS.

PLAN SHOWING POSITION OF PRECAST PANELS ON GRID '15' & GRID 'F' UP TO ROOF

PLAN 1ST TO 2ND Floor
GRD TO 1ST FLOOR SIMILAR BUT OMIT 2 PANELS

GROUND TO 2ND FLOOR

KEY PLAN SHOWING POSITION OF FLAT PRECAST PANELS TYPE A
DOTTED LINE SHOWS TYPE A PANELS ABOVE ROOF ONLY

PLAN SHOWING POSITION OF PRECAST PANELS ON GRID 1 & GRID C UP TO ROOF

PLAN SHOWING POSITION OF PRECAST PANELS ON GRID 1 & GRID C ABOVE ROOF

PANELS ON GRID 15 & GRID C SIMILAR BUT OPPOSITE HAND

PLAN SHOWING POSITION OF PRECAST PANELS ON GRID C & GRID 15 UP TO ROOF

PRECAST PANEL DRAWINGS

Job No	Dwg No	Stage
1848	S.69.	2.

Notes

Do not scale Use figured dimen
Report any discrepancy to the
architect before proceeding

Job No	Dwg No	Stage
1848	S.69.	2

PLAN SHOWING POS
OF PRECAST PANE
TYPE 'A' &

Designed: EKC	Traced
Drawn RBB	Checked
Date JULY. 1974	Scale ¼" =

WELLINGTON HOSP
BOARD
HUTT HOSPITAL
CLINICAL SERV
AND WARD BL

HAUGHTON AND MAIR
ARCHITECTS
THE TERRACE
WELLINGTON N Z

EDWARDS, CLENDON & PAR
CONSULTING ENGINEERS,
48 HOBSON ST,
WELLINGTON

Revisions

THIS is one of the Drawings ref
AGREEMENT signed by us thi
of 1 OCT 1975 19

EMPLOYER
WITNESS
DOWNER and CO.
CONTRACTOR
WITNESS

Job No	Dwg No	Stage
1848	S.69.	2

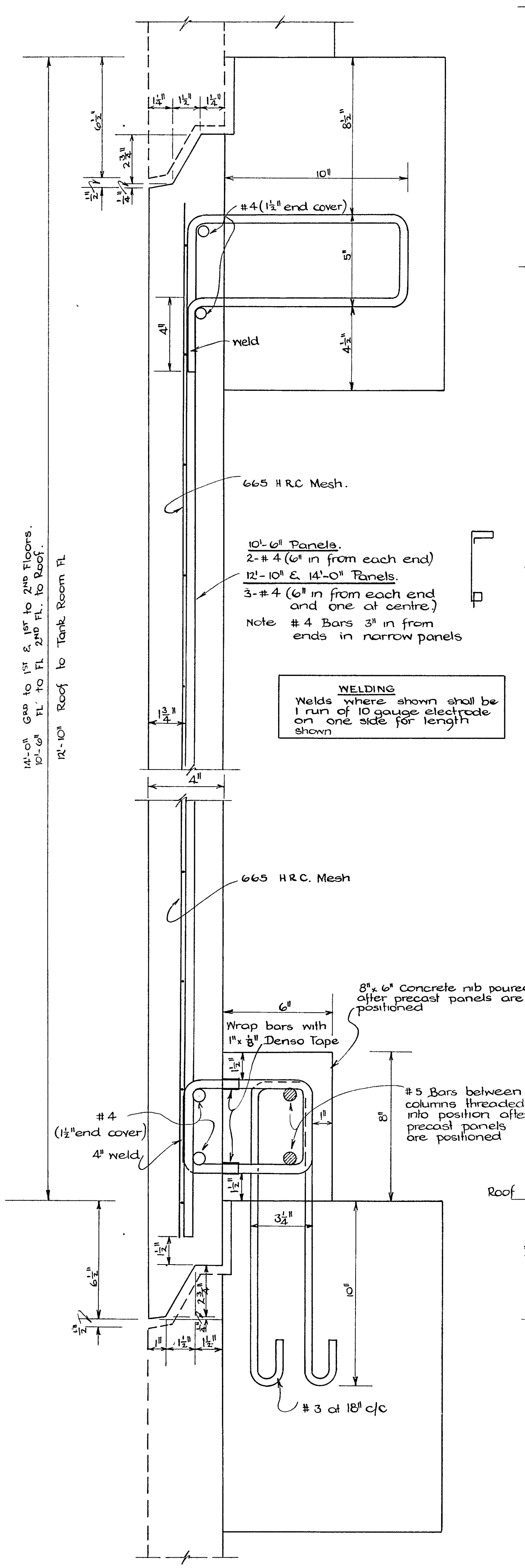

WELDING
Welds where shown shall be 1 run of 10 gauge electrode on one side for length shown

TYPICAL SECTION ~ TYPE 'A' PANELS AT BEAMS.

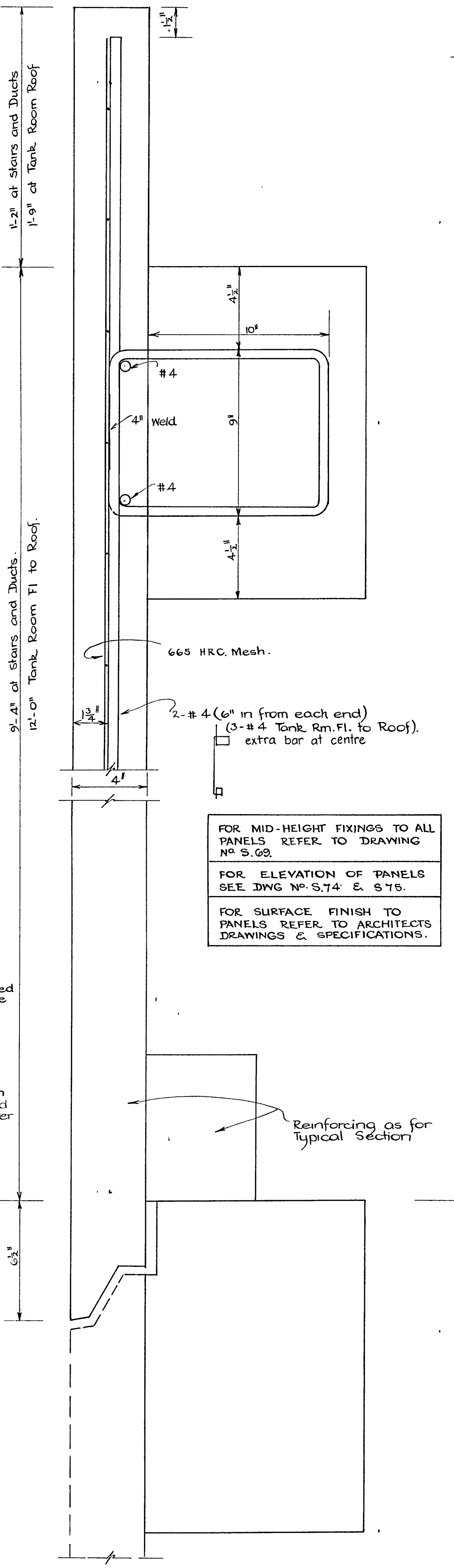

FOR MID-HEIGHT FIXINGS TO ALL PANELS REFER TO DRAWING No. S.69.

FOR ELEVATION OF PANELS SEE DWG No. S.74 & S75.

FOR SURFACE FINISH TO PANELS REFER TO ARCHITECTS DRAWINGS & SPECIFICATIONS.

SECTION TOP TYPE 'A' PANELS AT BEAMS.

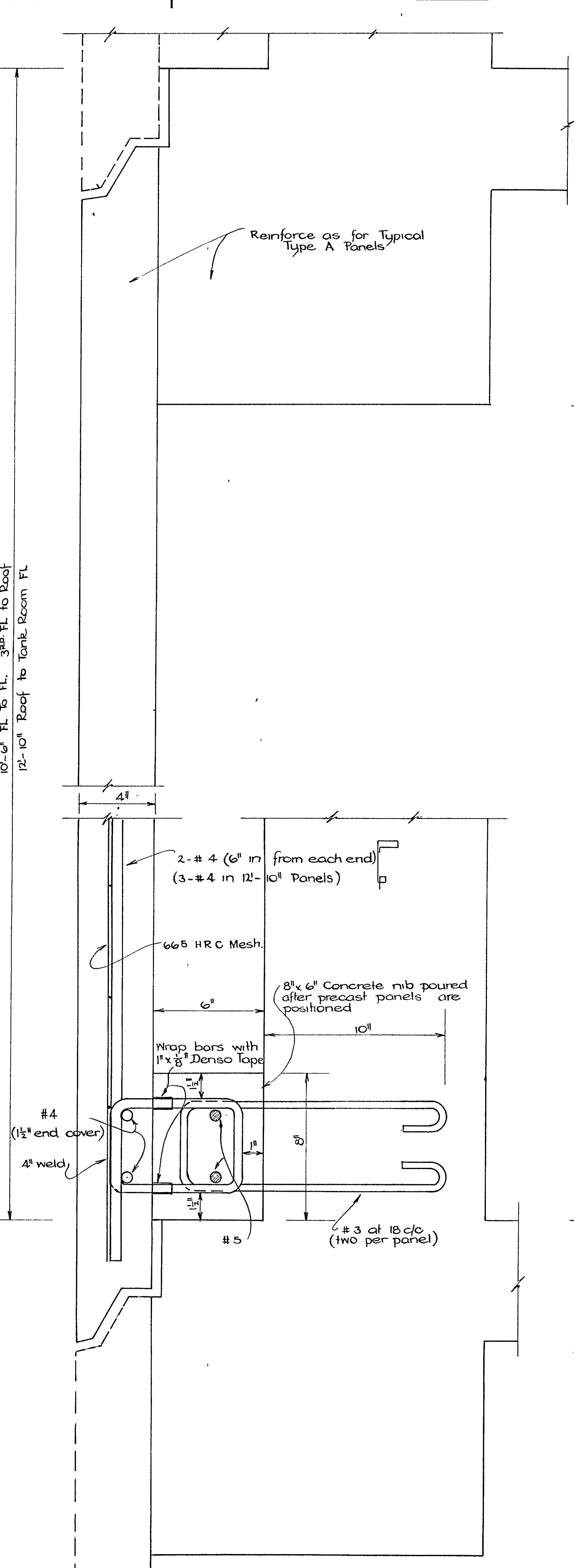

SECTION ~ TYPE 'A' PANELS AT SPANDREL GRID G 8 TO 10 3RD FL. TO RF. & TANK ROOM FL.

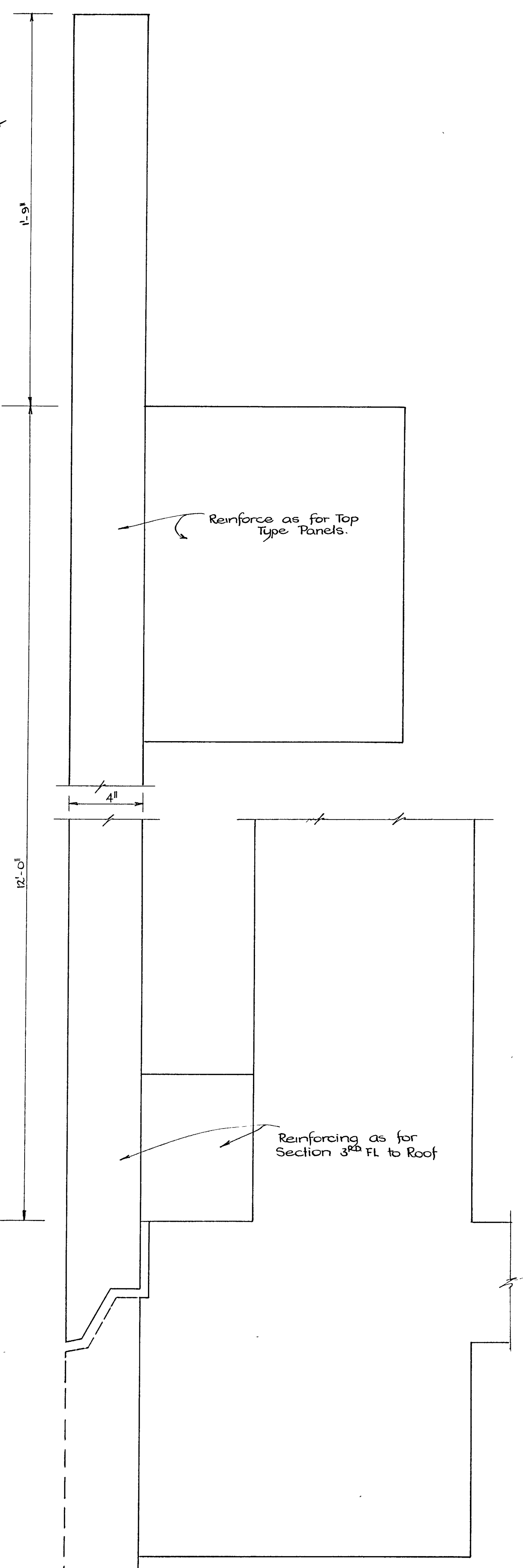

SECTION - TYPE 'A' PANELS. GRID G 8 TO 10. TANK RM. FL. TO ROOF.

PRECAST PANEL DRAWINGS

Job No 1848
Dwg No S.70
Stage 2.

Notes

Do not scale Use figured dime
Report any discrepancy to th
architect before proceeding

Job No 1848
Dwg No S.70.
Stage 2

SECTIONS TYP
PANELS AT BEA

Designed EKC	Traced. JO
Drawn RBB.	Checked E
Date JULY 1974	Scale ¼ Full S

WELLINGTON HOSP
BOARD
HUTT HOSPITAL
CLINICAL SERV
AND WARD BL

HAUGHTON AND MAIR
ARCHITECTS
THE TERRACE
WELLINGTON N Z

EDWARDS, CLENDON & PART
CONSULTING ENGINEERS,
48 HOBSON ST,
WELLINGTON

Revisions

THIS is one of the Drawings refe
AGREEMENT signed by us this
of - 1 OCT 1975 19

EMPLOYER
WITNESS
DOWNER and CO.
CONTRACTOR
WITNESS RFarrar

Job No 1848
Dwg. No S.70.
Stag 2

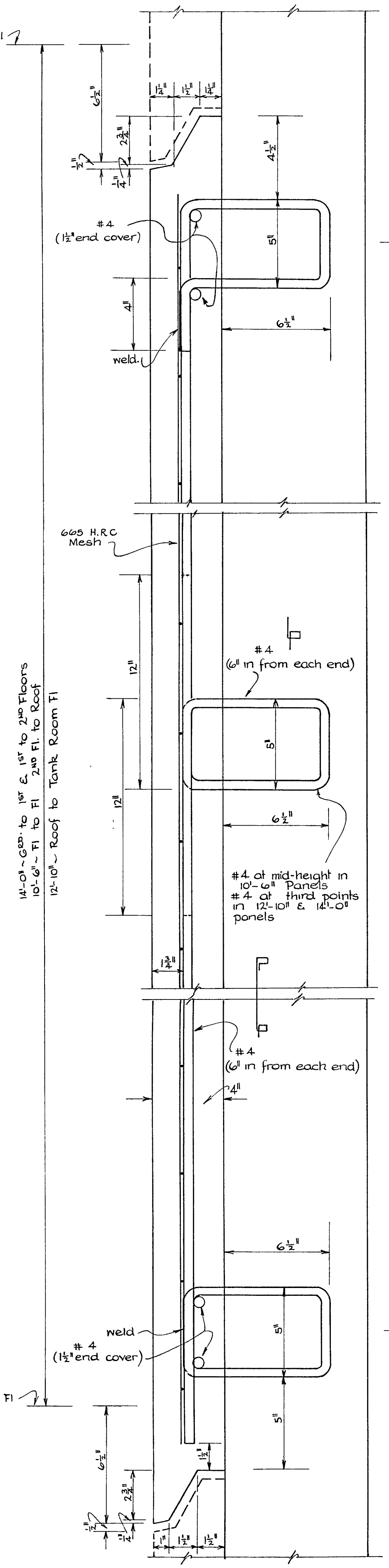

TYPICAL SECTION TYPE 'A' PANELS AT WALLS & COLS.

NOTE AT CORNER & NARROW PANELS #4 VERTICAL BARS TO BE 3" IN FROM ENDS.

WELDING.

Welds where shown shall be 1 run of 10 gauge electrode on one side for length shown.

FOR ELEVATION OF PANELS SEE DRAWING No. S 73.

FOR SURFACE FINISH TO PANELS REFER TO ARCHITECTS DRAWINGS & SPECIFICATION.

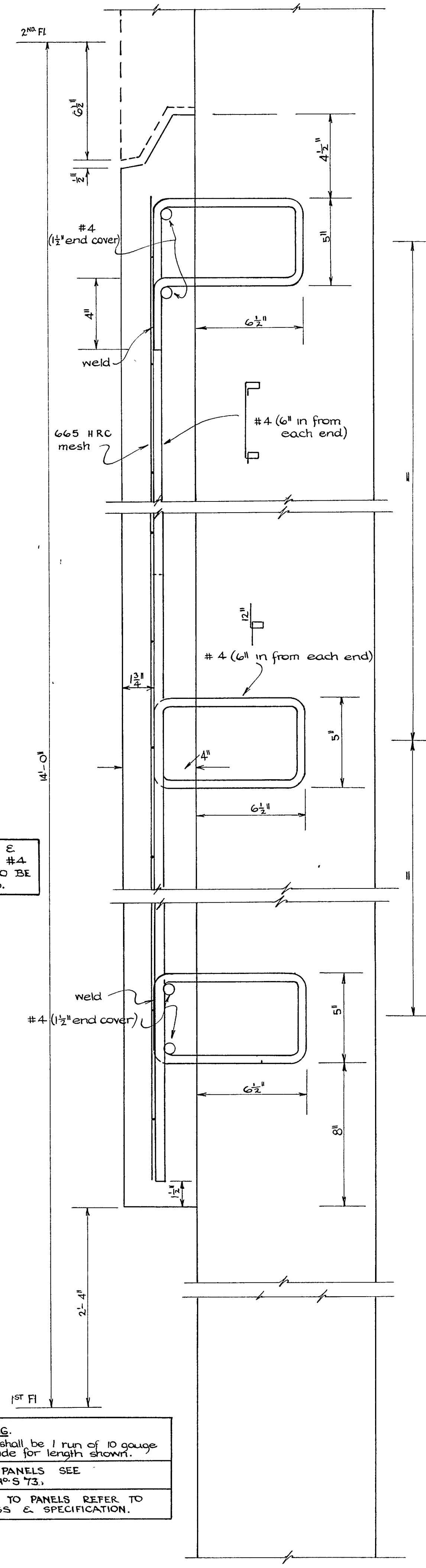

TYPE 'A' PANELS GRIDS 6 & 10 1st TO 2nd FLOORS.

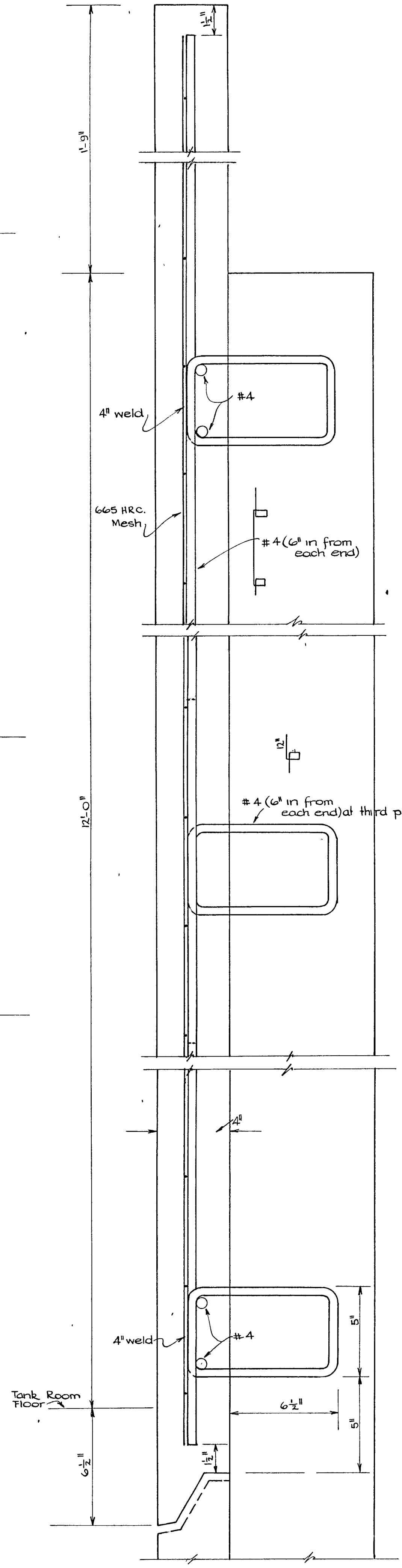

TYPE 'A' PANELS GRID 6 & 10 TOP PANELS.

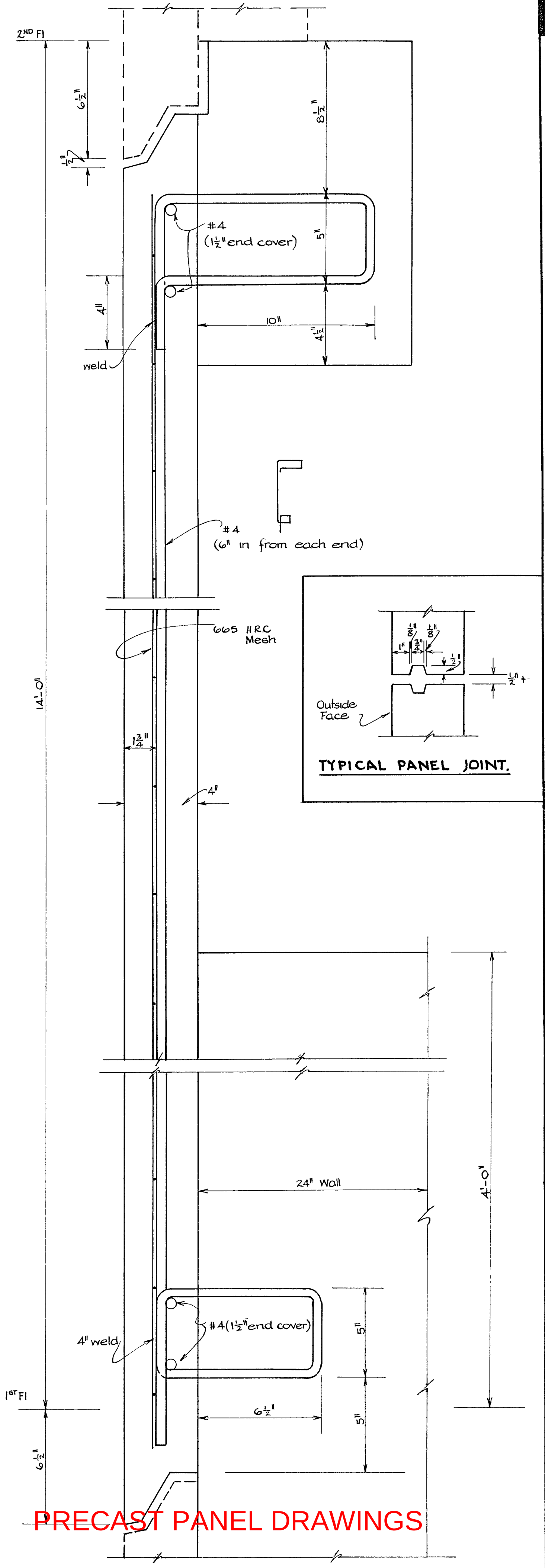

TYPE 'A' PANELS GRID C 1 TO 2 & 14 TO 15 GRID F 14 TO 15. 1st TO 2nd FLOOR ONLY

TYPICAL PANEL JOINT.

Job No 1848 | Dwg No S.71. | Stage 2.

Notes

Do not scale Use figured dimen
Report any discrepancy to th
architect before proceeding

Job No 1848 | Dwg No S.71. | Stage 2

TYPICAL SECTIONS
TYPE 'A' PANEL

Designed EKC	Traced
Drawn RBB	Checked
Date JULY 1974	Scale ¼ Full Si

WELLINGTON HOSP
BOARD
HUTT HOSPITAL
CLINICAL SERV
AND WARD BL

HAUGHTON AND MAIR
ARCHITECTS
THE TERRACE
WELLINGTON·N Z

EDWARDS, CLENDON & PART
CONSULTING ENGINEERS,
48 HOBSON ST,
WELLINGTON

Revisions

THIS is one of the Drawings refe
AGREEMENT signed by us this
of - 1 OCT 1975 19

EMPLOYER
WITNESS
CONTRACTOR DOWNER and CO. L
WITNESS RFarrar

Job No 1848 | Dwg No S.71. | Stage 2

Job No 1848 | Dwg No S.72.

Notes

Do not scale Use figured di
Report any discrepancy to
architect before proceedin

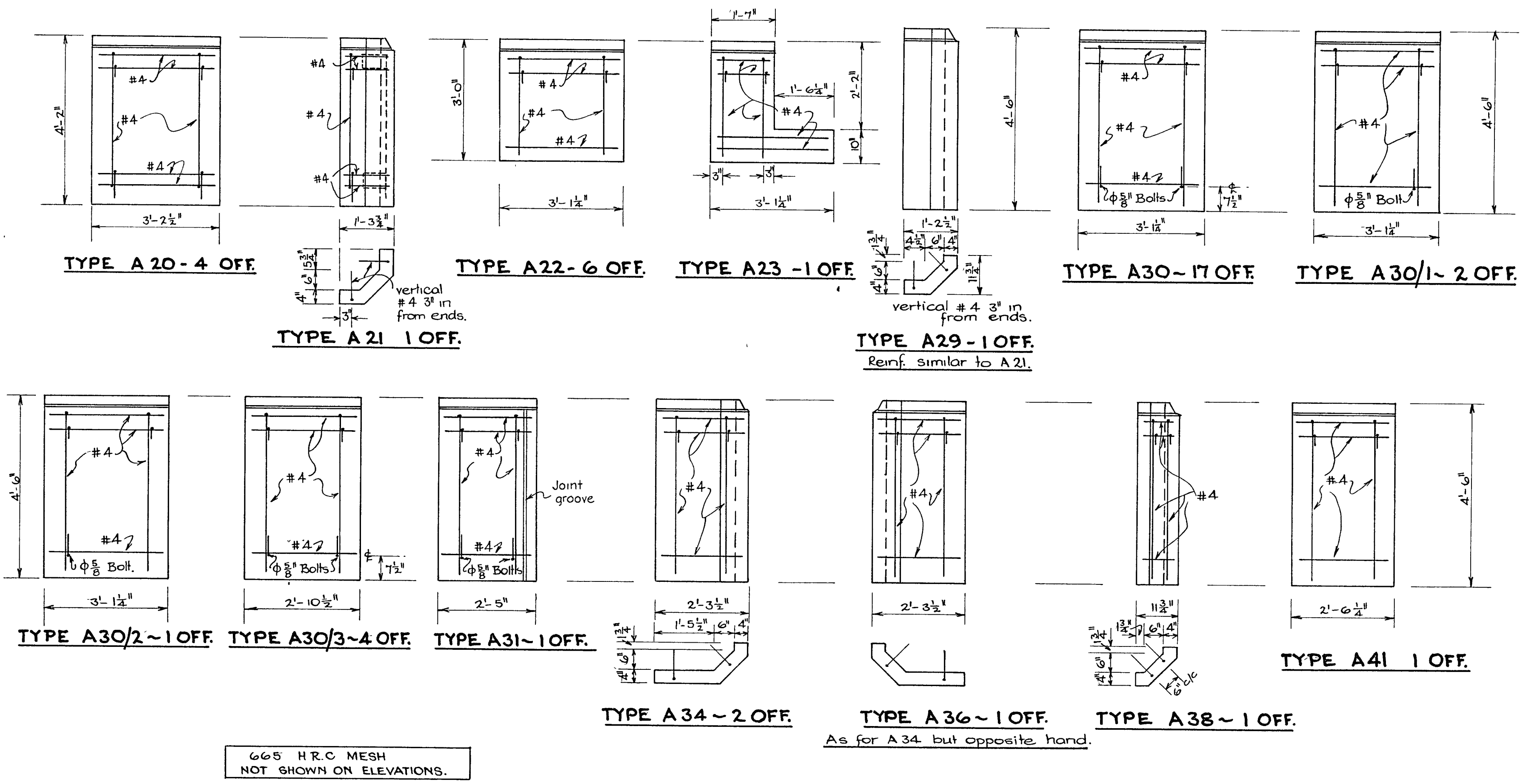

665 H.R.C MESH
NOT SHOWN ON ELEVATIONS.

ELEVATION OF TYPE 'A' SHORT PANELS.

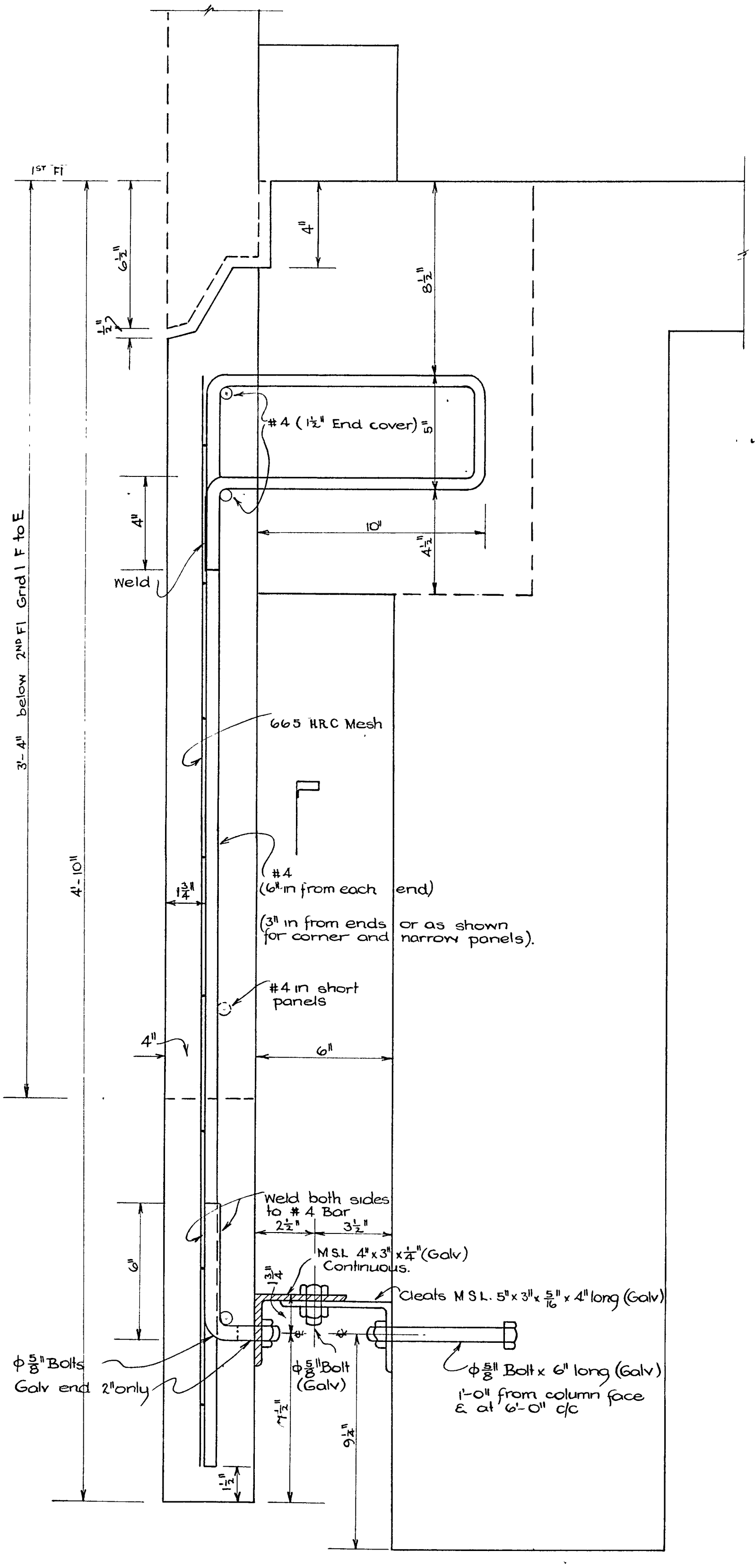

SECTION TYPE 'A' PANELS BELOW 1ST FL.
GRID G 8 TO 10.
& TYPE 'A' PANELS BELOW 2ND FL.
GRID 1 F TO E.

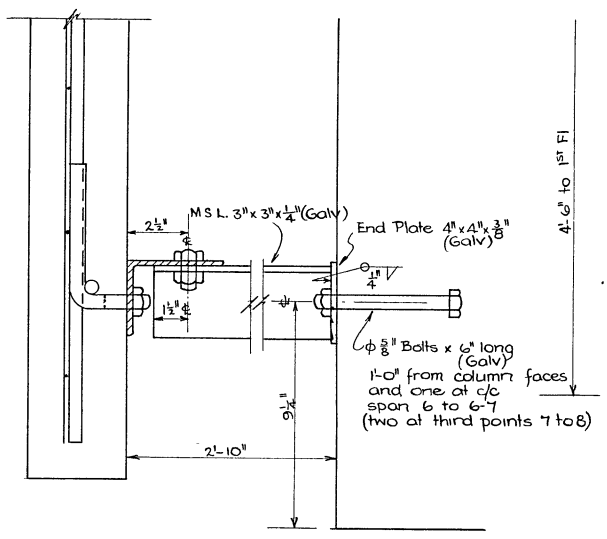

SECTION TYPE 'A' PANELS BELOW 1ST FL.
GRID G 6 TO 6-7 & 7 TO 8.

AS FOR GRID G 8 TO 10 ABOVE
but #4 vertical bars set into
wall 6½" instead of 10" at beam.

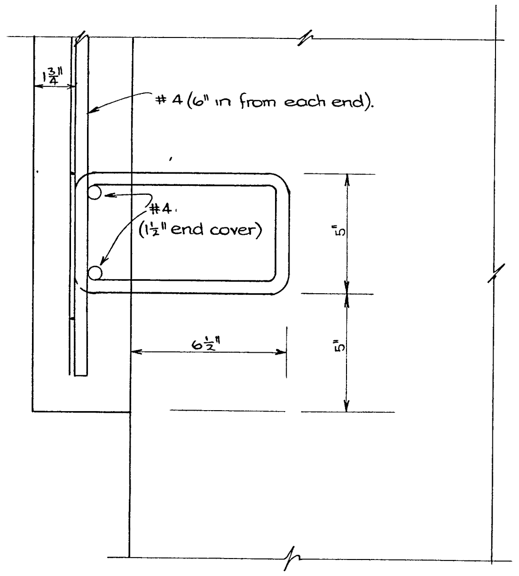

SECTION TYPE 'A' PANELS BELOW 1ST FL.
GRID F 1 TO 2.

Job No 1848 | Dwg No S.72.

DETAILS OF SHOR
TYPE A PANELS
BELOW 1ST FLOO

Designed. - E.K.C	Traced
Drawn R.B.B.	Checked
Date JULY 1974	Scale ¼ Full

WELLINGTON HOS
BOARD
HUTT HOSPITAL
CLINICAL SER
AND WARD

HAUGHTON AND MAIR
ARCHITECTS
THE TERRACE
WELLINGTON N Z

EDWARDS, CLENDON &
CONSULTING ENGINEER
48 HOBSON ST,
WELLINGTON

Revisions

THIS is one of the Drawings re
AGREEMENT signed by us th
of 1 OCT 1975 19

EMPLOYER
WITNESS
CONTRACTOR DOWNER and CO
WITNESS

Job No 1848 | Dwg No S.72.

PRECAST PANEL DRAWINGS

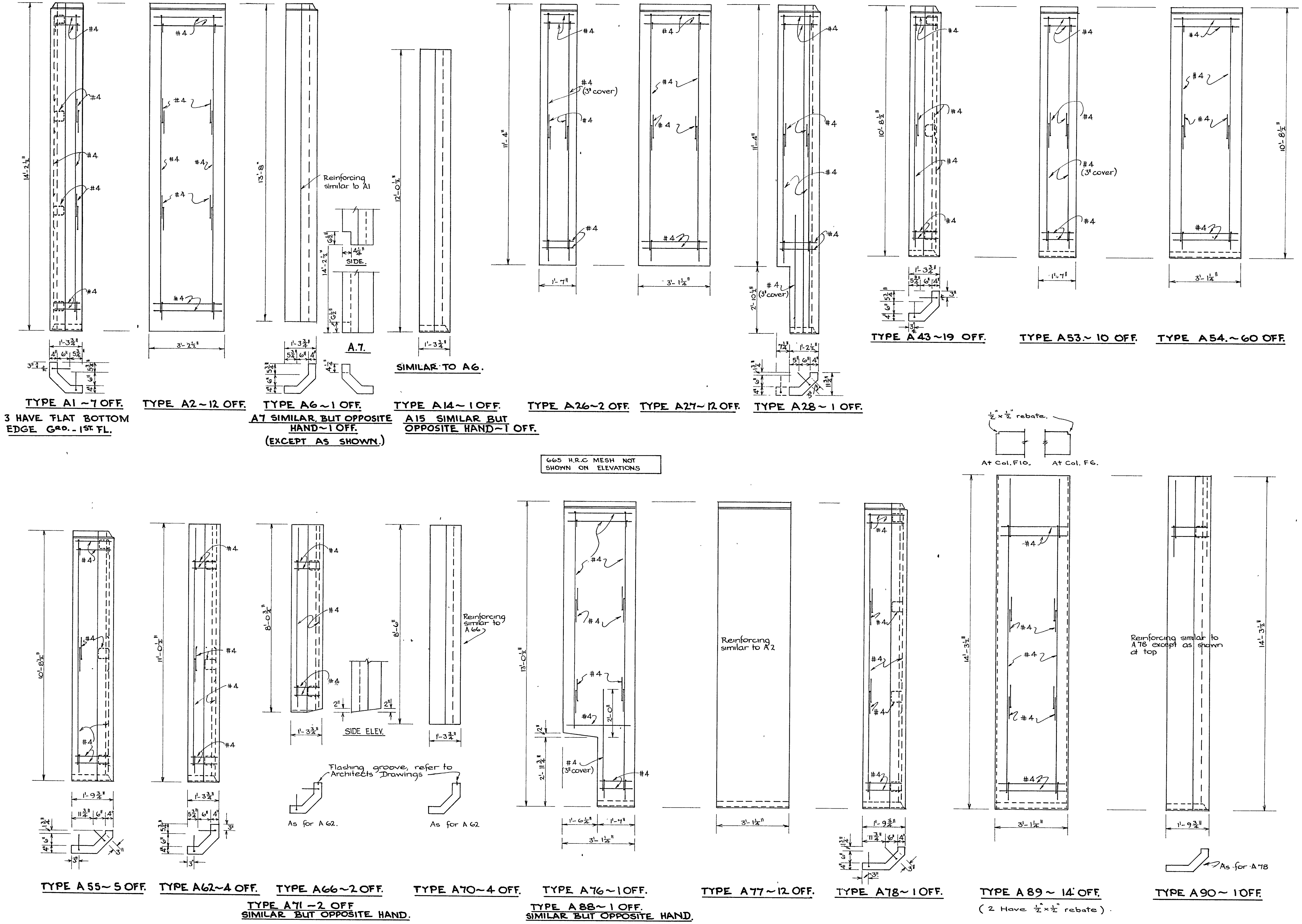

Job No 1848 | Dwg No S.73. | Sta

Notes

Do not scale Use figured d
Report any discrepancy to
architect before proceedin

Job No 1848 | Dwg No S.73. | Sta

ELEVATION OF TY
PANELS AGAINST
& COLUMNS.

Designed EKC | Traced
Drawn RBB | Checked
Date JULY. 1974 | Scale ½

WELLINGTON HOS
BOARD
HUTT HOSPITAL
CLINICAL SER
AND WARD E

HAUGHTON AND MAIR
ARCHITECTS
THE TERRACE
WELLINGTON N Z

EDWARDS, CLENDON &
CONSULTING ENGINEERS,
48 HOBSON ST,
WELLINGTON

Revisions

THIS is one of the Drawings
AGREEMENT signed by us
of 1 OCT 1975 9

EMPLOYER
WITNESS
CONTRACTOR DOWNER and C
WITNESS

Job No 1848 | Dwg No S.73. | Sta

PRECAST PANEL DRAWINGS

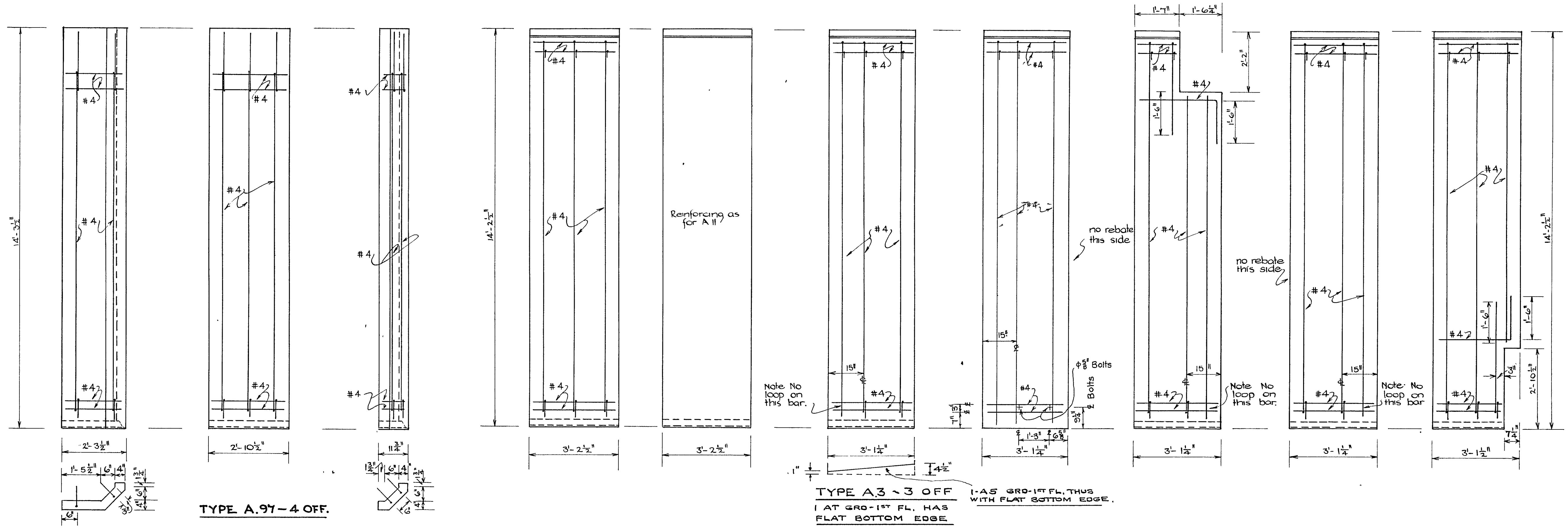

TYPE A.95.~ 2 OFF.

TYPE A 96~ 1 OFF SIMILAR
BUT OPPOSITE HAND

TYPE A.97 – 4 OFF.

Panels against Beams

TYPE A.98.~ 1 OFF.

TYPE A.11. –4 OFF.

(Partially against wall & Col.)

TYPE A.12~12 OFF.

(Partially against wall)

665 HRC MESH NOT SHOWN
ON ELEVATIONS

TYPE A.3 ~ 3 OFF

1 AT GRD-1ST FL, HAS
FLAT BOTTOM EDGE

1-A5 GRD-1ST FL, THUS
WITH FLAT BOTTOM EDGE.

TYPE A 32 ~1 OFF SIMILAR.

TYPE A 5 ~2 OFF SIMILAR
BUT OPPOSITE HAND

TYPE A 25 ~ 1 OFF SIMILAR
BUT OPPOSITE HAND.

TYPE A.8.~1 OFF.

TYPE A.10~1 OFF SIMILAR
BUT OPPOSITE HAND

TYPE A.13.~1 OFF.

TYPE A 16~ 1 OFF SIMILAR
BUT OPPOSITE HAND.

TYPE A.24~ 1 OFF SIMILAR
BUT OPPOSITE HAND

TYPE A.19.~ 1 OFF.

TYPE A.42~ 1 OFF.

(Partially against columns).

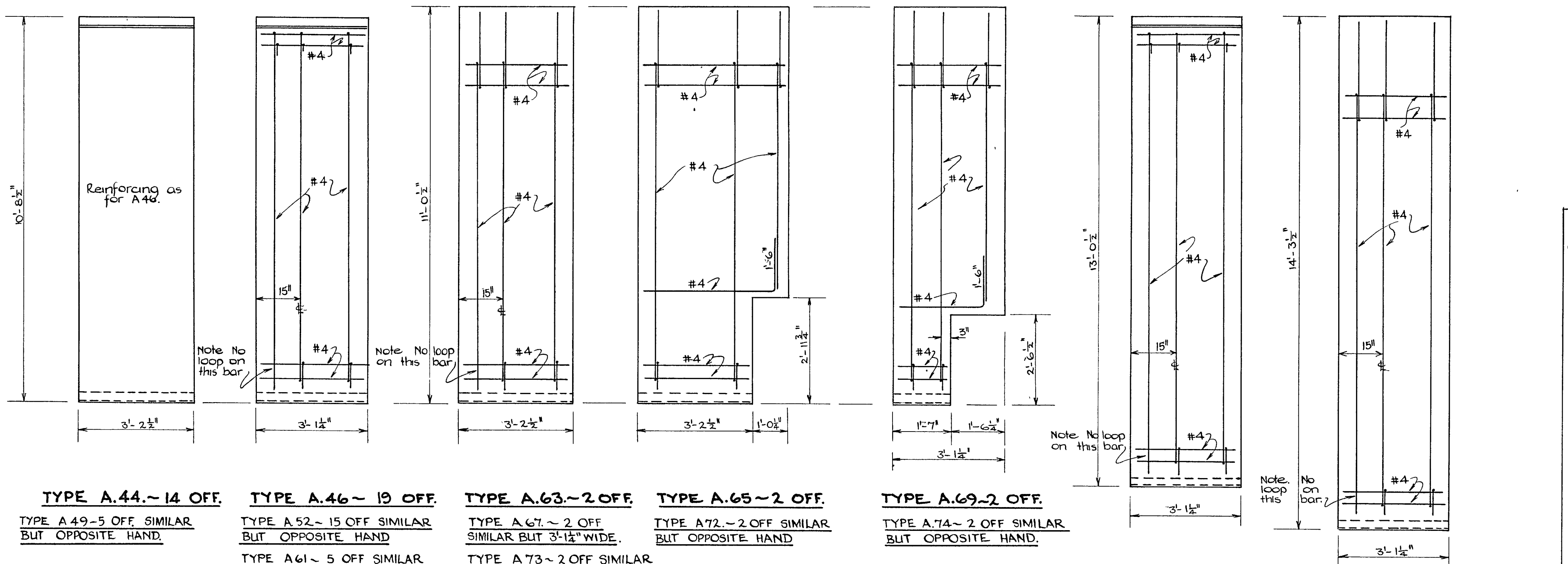

TYPE A.44.~ 14 OFF.

TYPE A 49–5 OFF. SIMILAR
BUT OPPOSITE HAND.

TYPE A.46~ 19 OFF.

TYPE A 52~ 15 OFF SIMILAR
BUT OPPOSITE HAND

TYPE A61~ 5 OFF SIMILAR
BUT 3'-1½" WIDE

TYPE A.63.~2 OFF.

TYPE A 67. ~ 2 OFF
SIMILAR BUT 3'-1¼" WIDE.

TYPE A 73~ 2 OFF SIMILAR
BUT OPPOSITE HAND

TYPE A.75~ 2 OFF SIMILAR
BUT 3'-1¼" WIDE & OPPOSITE HAND

TYPE A.65~2 OFF.

TYPE A 72.~2 OFF SIMILAR
BUT OPPOSITE HAND

TYPE A.69~2 OFF.

TYPE A.74~ 2 OFF SIMILAR
BUT OPPOSITE HAND.

TYPE A.79~ 2 OFF.

TYPE A 81 ~ 1 OFF SIMILAR
BUT OPPOSITE HAND

TYPE A. 87~ 1 OFF SIMILAR
BUT 3'-1½" WIDE.

TYPE A.91~2 OFF.

TYPE A 93~1 OFF SIMILAR
BUT OPPOSITE HAND

TYPE A.99.~ 1 OFF SIMILAR
BUT 3'-1½" WIDE & OPPOSITE HAND.

Panels partially against columns.

FOR DETAIL OF MID-HEIGHT
FIXING CLEATS SEE DWG No S 69.

FOR TYPICAL SECTIONS SEE
DWG No S 70

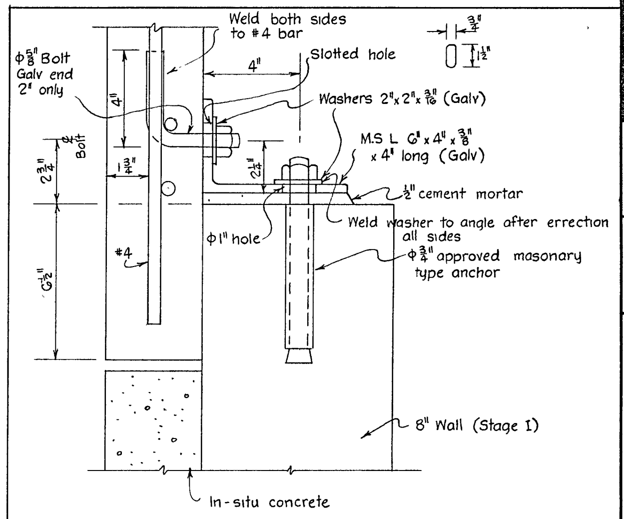

DETAIL OF FIXING TO PANELS
TYPE A8, A9 & A10 AT GROUND FLOOR.

Job No 1848. Dwg No S74.

Notes

Do not scale Use figured dim
Report any discrepancy to
architect before proceeding

Job No 1848. Dwg No S.74.

DETAIL OF TYPE A
AGAINST BEAMS~P
AGAINST WALLS
COLUMNS.

Designed. E.K.C.	Traced
Drawn R B.B	Checked
Date JULY. 1974	Scale ½"=

WELLINGTON HOS
BOARD
HUTT HOSPITAL
CLINICAL SERV
AND WARD B

HAUGHTON AND MAIR
ARCHITECTS
THE TERRACE
WELLINGTON N Z

EDWARDS, CLENDON & PA
CONSULTING ENGINEERS,
48 HOBSON ST.
WELLINGTON

Revisions

THIS is one of the Drawings r
AGREEMENT signed by us th
of - 1 OCT 1975 19.......

EMPLOYER..............................

WITNESS..............................

DOWNEY and CO

CONTRACTOR..............................

WITNESS..............................

Job No 1848. Dwg No S.74.

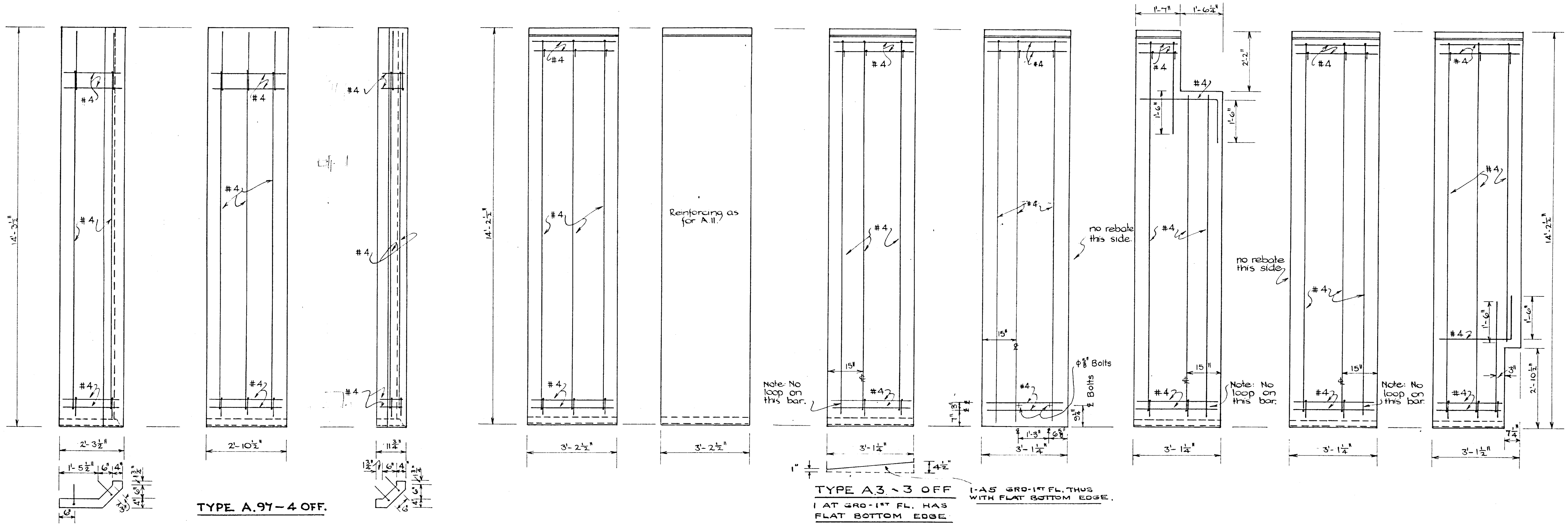

TYPE A.3 ~ 3 OFF

I AT GRD-1ST FL. HAS FLAT BOTTOM EDGE

1-A5 GRD-1ST FL. THUS WITH FLAT BOTTOM EDGE.

TYPE A.97 – 4 OFF.

TYPE A.95.– 2 OFF.

TYPE A.96 ~ 1 OFF SIMILAR BUT OPPOSITE HAND.

Panels against Beams.

TYPE A.98.~ 1 OFF.

TYPE A.11. –4 OFF.

(Partially against wall & Col.)

TYPE A.12~12 OFF.

(Partially against wall.)

665 H.R.C. MESH NOT SHOWN ON ELEVATIONS.

TYPE A.32 ~ 1 OFF SIMILAR.

TYPE A.5 ~ 2 OFF SIMILAR BUT OPPOSITE HAND.

TYPE A.25 ~ 1 OFF SIMILAR BUT OPPOSITE HAND.

TYPE A.8.~ 1 OFF.

TYPE A.10 ~ 1 OFF SIMILAR BUT OPPOSITE HAND.

TYPE A.13.~ 1 OFF.

TYPE A.16 ~ 1 OFF SIMILAR BUT OPPOSITE HAND.

TYPE A.24 ~ 1 OFF SIMILAR BUT OPPOSITE HAND.

TYPE A.19.~ 1 OFF.

TYPE A.42.~ 1 OFF.

(Partially against columns).

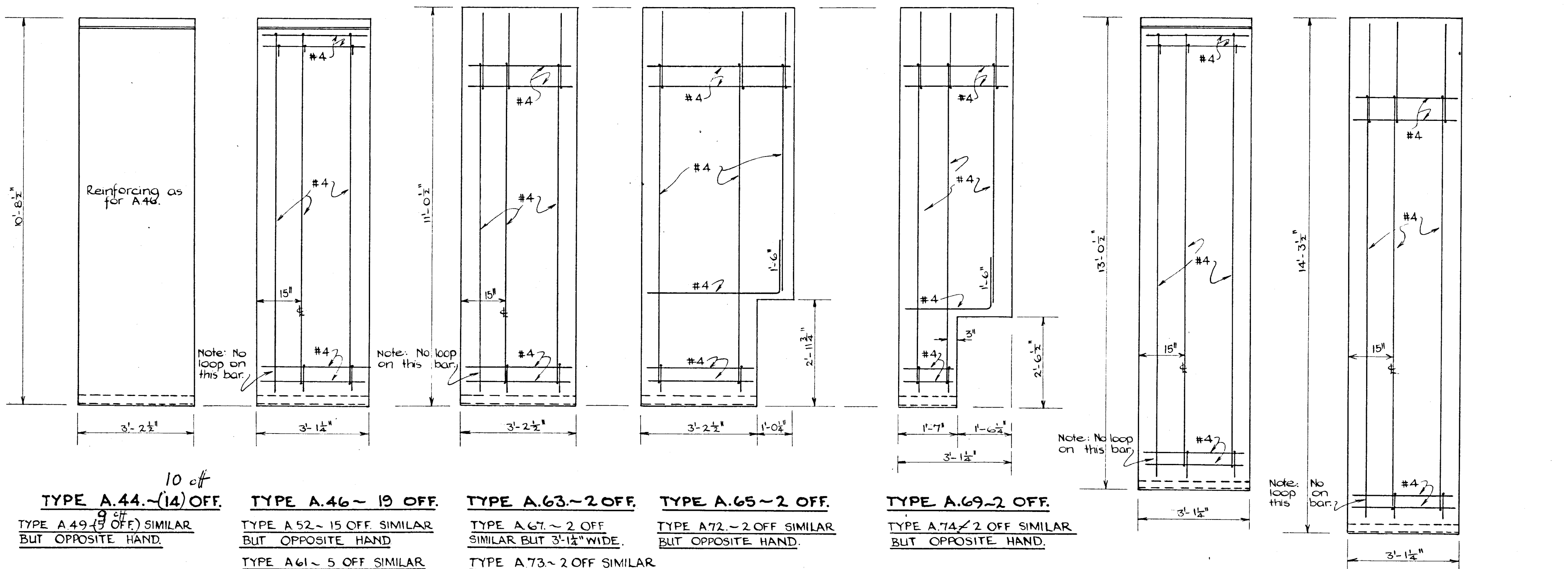

TYPE A.44.~(14) OFF. 10 off

TYPE A.49 (5 OFF.) 9 off SIMILAR BUT OPPOSITE HAND.

TYPE A.46~ 19 OFF.

TYPE A.52 ~ 15 OFF. SIMILAR BUT OPPOSITE HAND.

TYPE A.61 ~ 5 OFF SIMILAR BUT 3'-1½" WIDE.

TYPE A.63.~2 OFF.

TYPE A.67. ~ 2 OFF SIMILAR BUT 3'-1¼" WIDE.

TYPE A.73.~ 2 OFF SIMILAR BUT OPPOSITE HAND.

TYPE A.75 ~ 2 OFF SIMILAR BUT 3'-1¼" WIDE & OPPOSITE HAND.

TYPE A.65~2 OFF.

TYPE A.72.~2 OFF SIMILAR BUT OPPOSITE HAND.

TYPE A.69~2 OFF.

TYPE A.74 ~ 2 OFF SIMILAR BUT OPPOSITE HAND.

TYPE A.79~ 2 OFF.

TYPE A.81 ~ 1 OFF SIMILAR BUT OPPOSITE HAND.

TYPE A.87 ~ 1 OFF SIMILAR BUT 3'-1½" WIDE.

TYPE A.91~2 OFF.

TYPE A.93 ~ 1 OFF SIMILAR BUT OPPOSITE HAND.

TYPE A.99.~ 1 OFF SIMILAR BUT 3'-1½" WIDE & OPPOSITE HAND.

Panels partially against columns.

FOR DETAIL OF MID-HEIGHT FIXING CLEATS SEE DWG. No. S.69.

FOR TYPICAL SECTIONS SEE DWG. No. S.70.

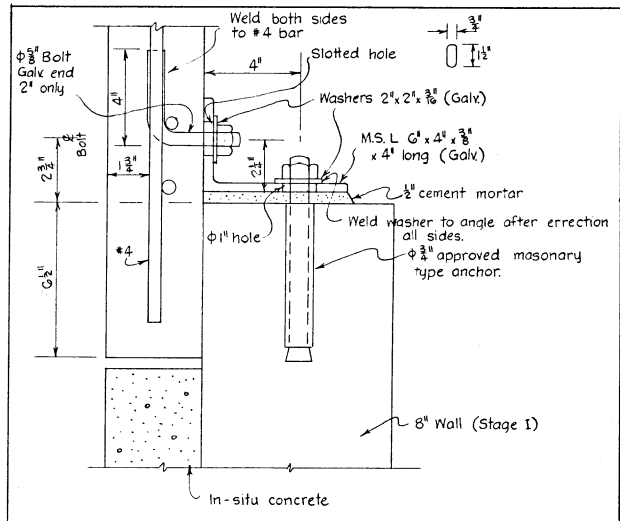

DETAIL OF FIXING TO PANELS TYPE A8, A9 & A10 AT GROUND FLOOR.

PRECAST PANEL DRAWINGS

Job No. 1848. | Dwg. No. S.74. | Stage 2.

Notes

Do not scale. Use figured dimensio
Report any discrepancy to the
architect before proceeding.

Job No. 1848. | Dwg. No. S.74. | Stage 2.

**DETAIL OF TYPE 'A' PA
AGAINST BEAMS~PART
AGAINST WALLS &
COLUMNS.**

Designed: E.K.C.
Traced: J.ON
Drawn R.B.B.
Checked EKC
Date JULY. 1974.
Scale ½" = 1'-0"

WELLINGTON HOSPITA
BOARD
HUTT HOSPITAL
**CLINICAL SERVIC
AND WARD BLO**

HAUGHTON AND MAIR
ARCHITECTS
THE TERRACE
WELLINGTON N.Z.

EDWARDS, CLENDON & PARTNER
CONSULTING ENGINEERS,
48 HOBSON ST.
WELLINGTON.

Revisions

Job No. 1848. | Dwg. No. S.74. | Stage 2.

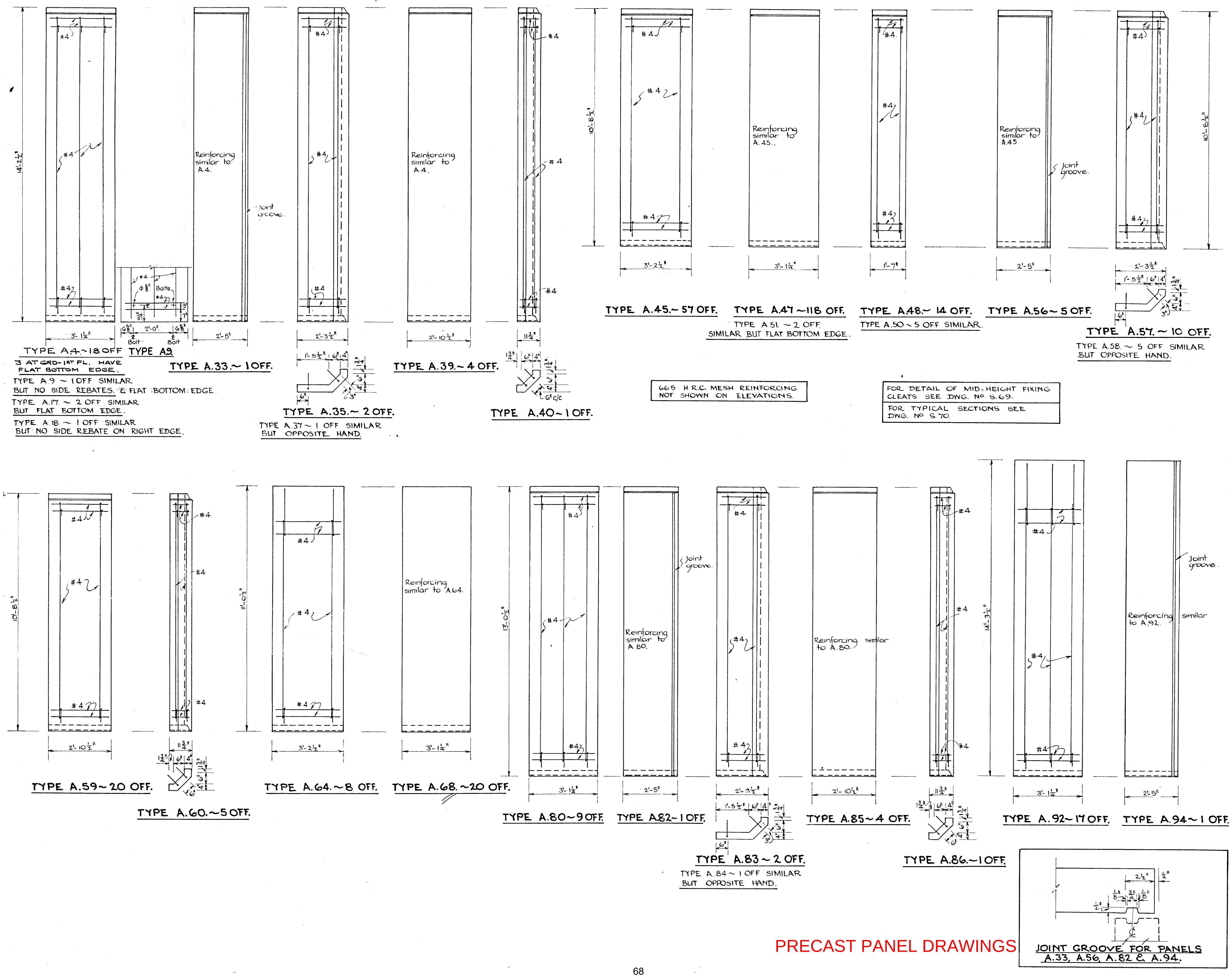

TYPE A.4.~18 OFF
3 AT GRD-1ST FL. HAVE FLAT BOTTOM EDGE.
TYPE A.9 ~ 1 OFF SIMILAR BUT NO SIDE REBATES. & FLAT BOTTOM EDGE
TYPE A.17. ~ 2 OFF SIMILAR BUT FLAT BOTTOM EDGE.
TYPE A.18 ~ 1 OFF SIMILAR BUT NO SIDE REBATE ON RIGHT EDGE.

TYPE A9.

TYPE A.33.~ 1 OFF.

TYPE A.35.~ 2 OFF.
TYPE A.37 ~ 1 OFF SIMILAR BUT OPPOSITE HAND.

TYPE A.39.~ 4 OFF.

TYPE A.40 ~ 1 OFF.

TYPE A.45.~ 57 OFF.

TYPE A.47 ~ 118 OFF.
TYPE A.51. ~ 2 OFF. SIMILAR BUT FLAT BOTTOM EDGE.

TYPE A.48.~ 14 OFF.
TYPE A.50 ~ 5 OFF SIMILAR.

TYPE A.56 ~ 5 OFF.

TYPE A.57. ~ 10 OFF.
TYPE A.58. ~ 5 OFF SIMILAR BUT OPPOSITE HAND.

665 H.R.C. MESH REINFORCING NOT SHOWN ON ELEVATIONS.

FOR DETAIL OF MID-HEIGHT FIXING CLEATS SEE DWG. Nº S.69.

FOR TYPICAL SECTIONS SEE DWG. Nº S.70.

TYPE A.59 ~ 20 OFF.

TYPE A.60.~ 5 OFF.

TYPE A.64.~ 8 OFF.

TYPE A.68. ~ 20 OFF.

TYPE A.80 ~ 9 OFF.

TYPE A.82 ~ 1 OFF.

TYPE A.83 ~ 2 OFF.
TYPE A.84 ~ 1 OFF SIMILAR BUT OPPOSITE HAND.

TYPE A.85 ~ 4 OFF.

TYPE A.86.~ 1 OFF.

TYPE A.92.~ 17 OFF.

TYPE A.94 ~ 1 OFF.

JOINT GROOVE FOR PANELS A.33, A.56, A.82 & A.94.

PRECAST PANEL DRAWINGS

Job No.	Dwg. No	Stage
1848.	S.75.	2

Notes

Do not scale. Use figured dimen
Report any discrepancy to the
architect before proceeding.

Job No.	Dwg. No.	Stage
1848.	S.75.	2.

DETAIL OF TYPE '
PANELS AT BEAM

Designed: E.K.C.	Traced: J.C
Drawn R.B.B.	Checked
Date JULY. 1974.	Scale 1/2" = 1'-

WELLINGTON HOSPI
BOARD
HUTT HOSPITAL
CLINICAL SERVI
AND WARD BL

HAUGHTON AND MAIR
ARCHITECTS
THE TERRACE
WELLINGTON N.Z.

EDWARDS, CLENDON & PA
CONSULTING ENGINEERS,
48 HOBSON ST,
WELLINGTON.

Revisions

Job No.	Dwg. No.	Stage
1848.	S.75.	2.

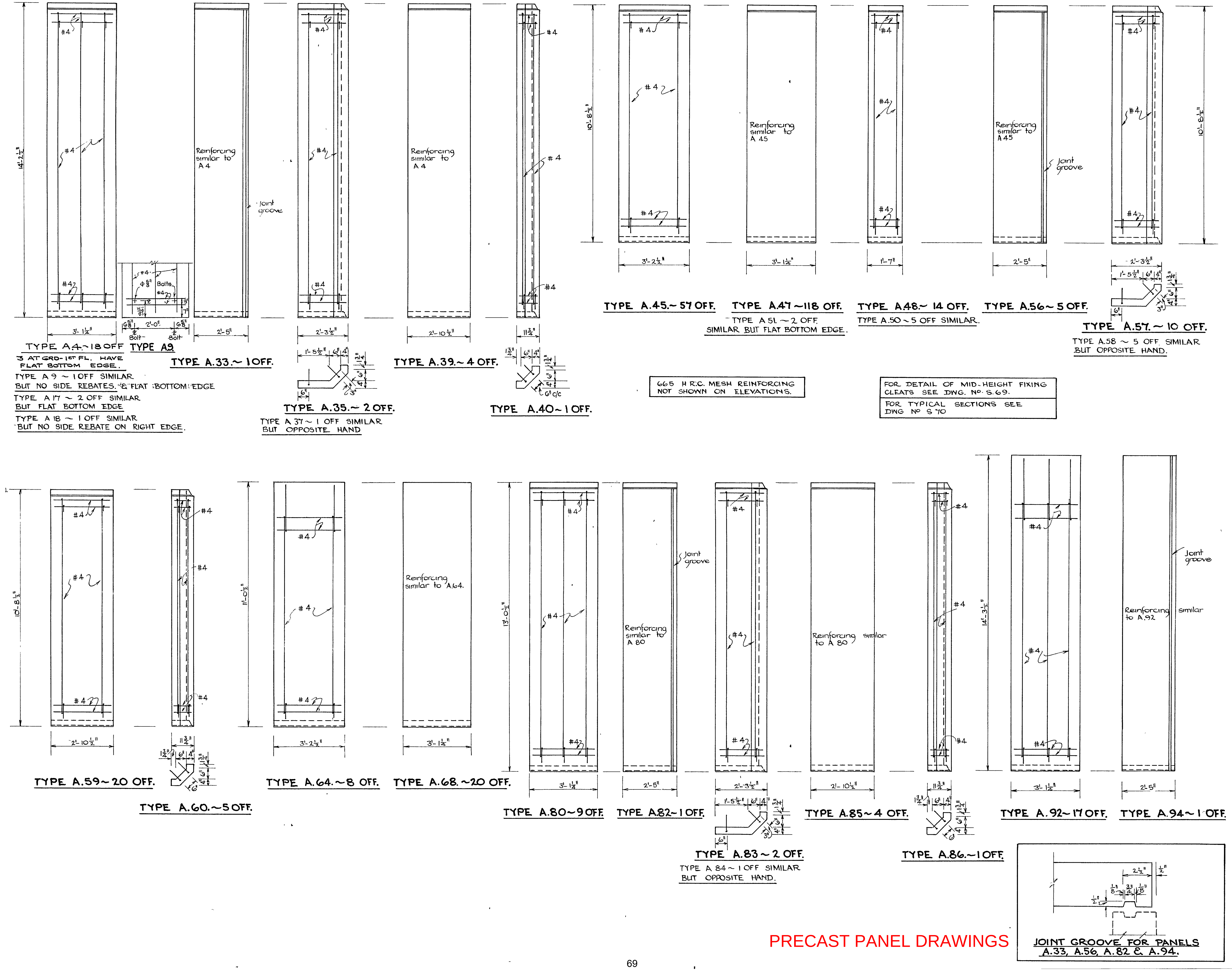

665 H.R.C. MESH REINFORCING NOT SHOWN ON ELEVATIONS.

FOR DETAIL OF MID-HEIGHT FIXING CLEATS SEE DWG. No. S.69.

FOR TYPICAL SECTIONS SEE DWG No S 70

PRECAST PANEL DRAWINGS

Job No 1848. | Dwg No S.75. | Stag 2

Notes

Do not scale Use figured dime
Report any discrepancy to th
architect before proceeding

Job No 1848. | Dwg No S.75. | Stag 2

DETAIL OF TYPE
PANELS AT BEAM

Designed. E K.C	Traced
Drawn R B B	Checked
Date JULY 1974.	Scale ½" = 1

WELLINGTON HOSP
BOARD
HUTT HOSPITAL
CLINICAL SERV
AND WARD BL

HAUGHTON AND MAIR
ARCHITECTS
THE TERRACE
WELLINGTON N Z

EDWARDS, CLENDON &
CONSULTING ENGINEERS,
48 HOBSON ST,
WELLINGTON

Revisions

THIS is one of the Drawings re
AGREEMENT signed by us th
of 21 OCT 1975 19

EMPLOYER ....
WITNESS ....
CONTRACTOR DOWNER and CO
WITNESS

Job No 1848. | Dwg No S.75. | Stag 2

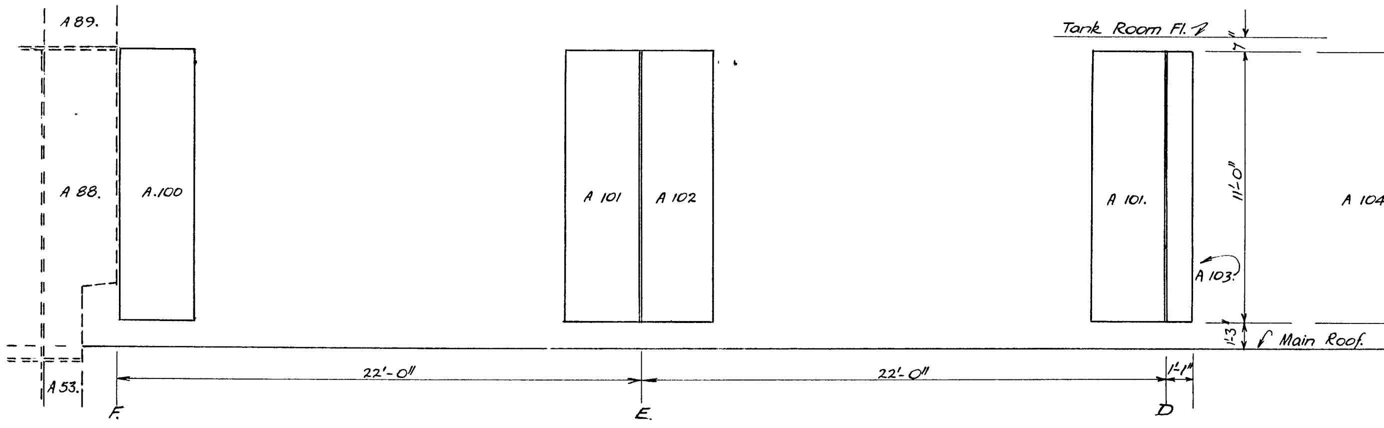

ELEVATION ON GRID 6 F TO D.

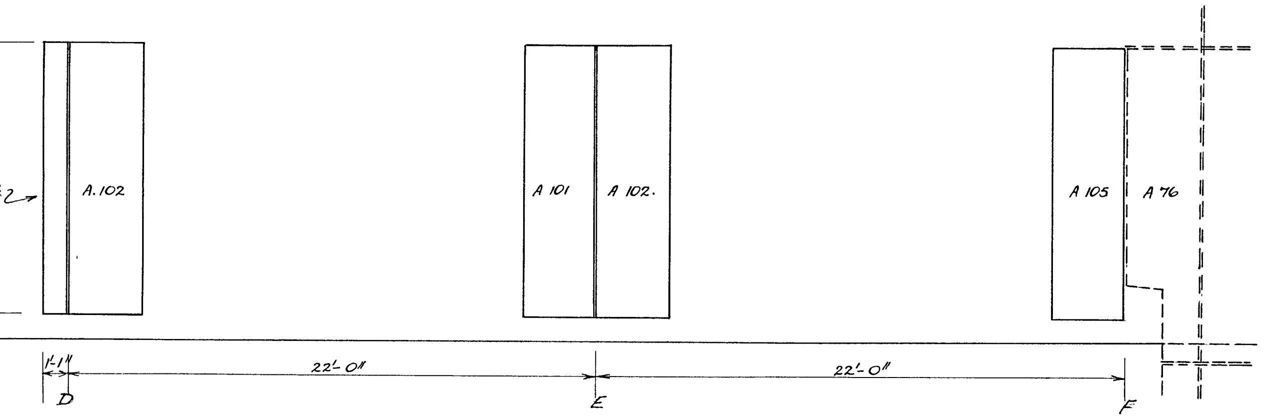

ELEVATION ON GRID 10. D TO F.

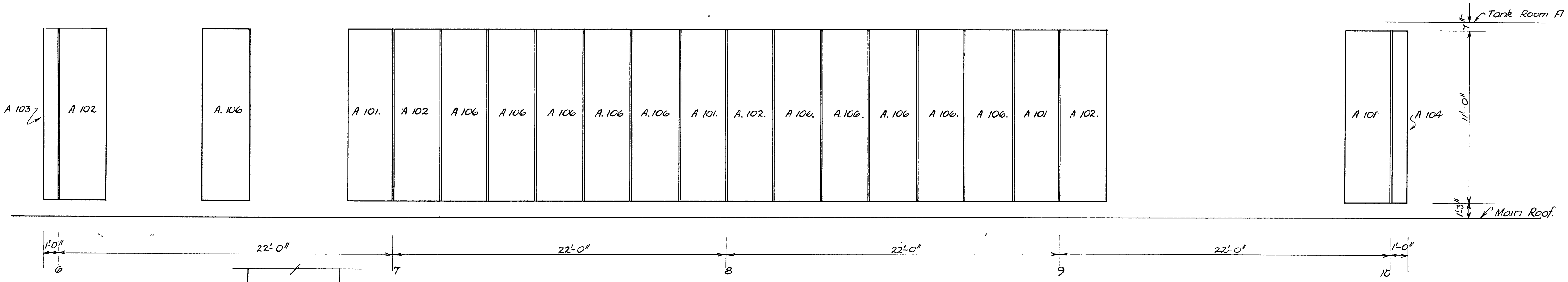

ELEVATION ON GRID 'D' 6 TO 10.

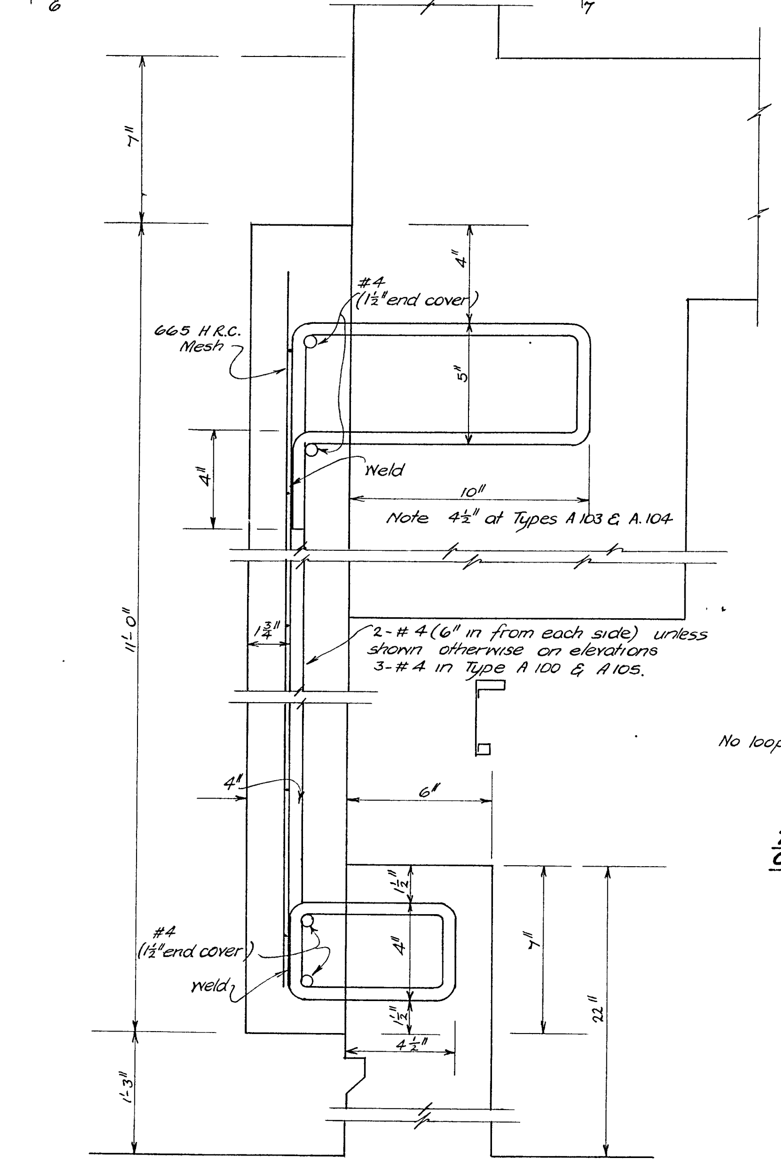

SECTION THRU TYPICAL PANEL.

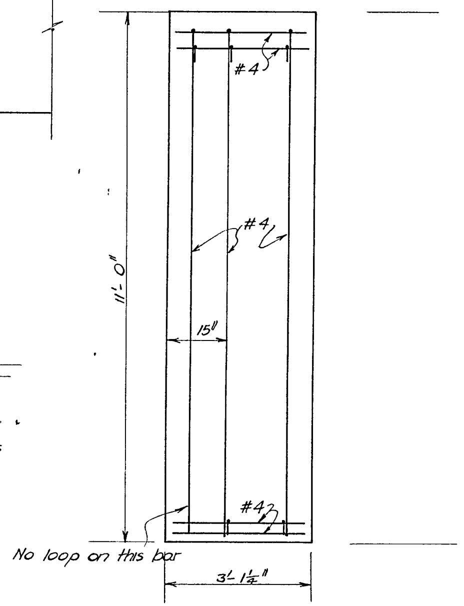

TYPE A.100 ~ 1 OFF.
TYPE A.105 SIMILAR BUT OPPOSITE HAND. ~ 1 OFF.

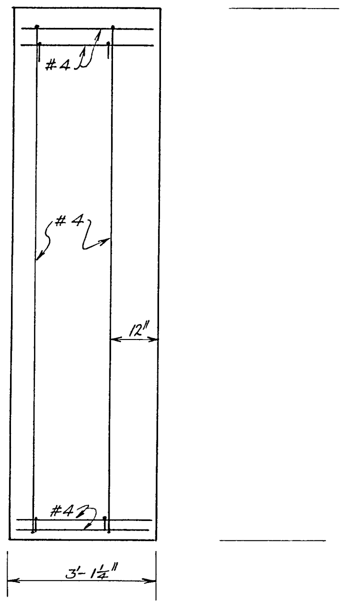

TYPE A.101 ~ 7 OFF.
TYPE A.102 SIMILAR BUT OPPOSITE HAND. ~ 7 OFF.

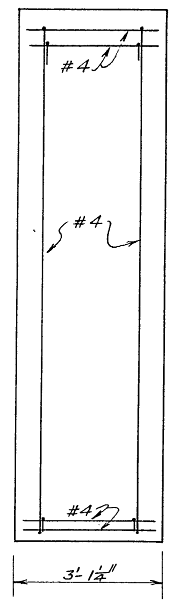

TYPE A.106 ~ 11 OFF.

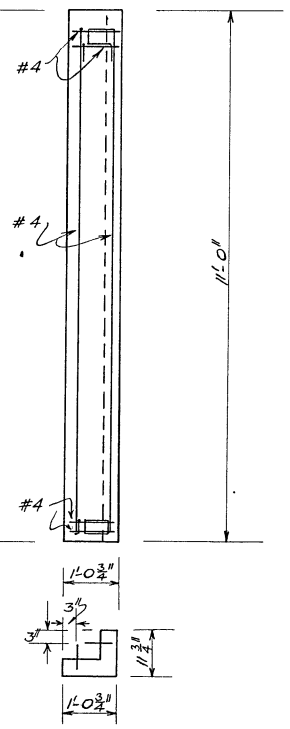

TYPE A. 103 ~ 1 OFF.
TYPE A.104 SIMILAR BUT OPPOSITE HAND. ~ 1 OFF.

FOR JOINT DETAIL SEE DWG No S 71

665 HRC MESH NOT SHOWN ON ELEVATIONS.

PRECAST PANEL DRAWINGS

Job No. 1848. | Dwg No S.76. | Sta

Notes

Do not scale Use figured dir
Report any discrepancy to
architect before proceeding

Job No 1848. | Dwg No S.76. | Sta

ELEVATIONS & DI
OF TYPE 'A' PAN
ABOVE ROOF GRID

Designed: EKC	Traced
Drawn R.B.B	Checked
Date JULY 1974	Scale ¼" ¼ Fu

WELLINGTON HOS
BOARD
HUTT HOSPITAL
CLINICAL SERV
AND WARD B

HAUGHTON AND MAIR
ARCHITECTS
THE TERRACE
WELLINGTON N Z

EDWARDS, CLENDON &
CONSULTING ENGINEER
48 HOBSON ST,
WELLINGTON

Revisions

THIS is one of the Drawings re
AGREEMENT signed by us th
of - 1 OCT 1975 19

EMPLOYER

WITNESS

DOWNER and CO
CONTRACTOR

WITNESS

Job No 1848 | Dwg No S.76. | Sta 2

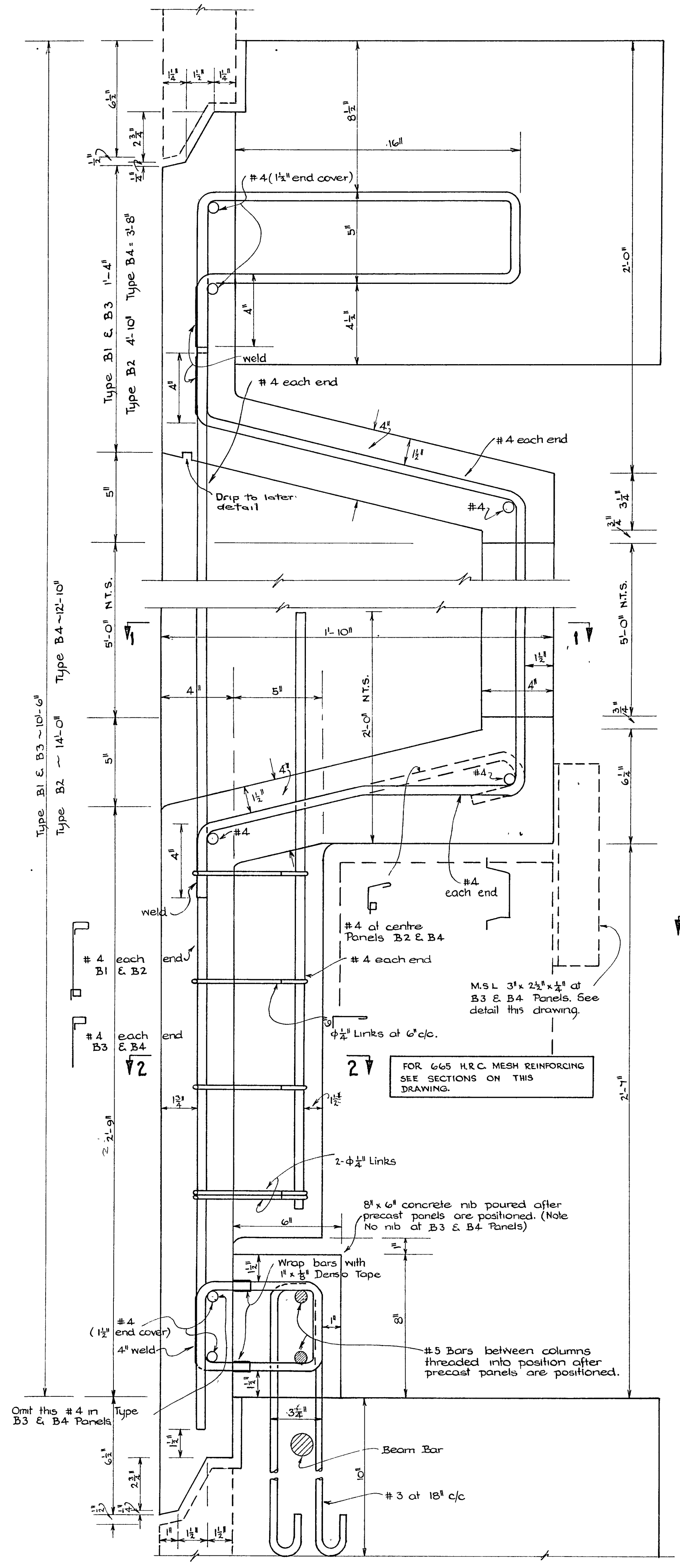

FOR 665 H.R.C. MESH REINFORCING SEE SECTIONS ON THIS DRAWING.

TYPICAL SECTION ~ TYPE 'B' PANELS.

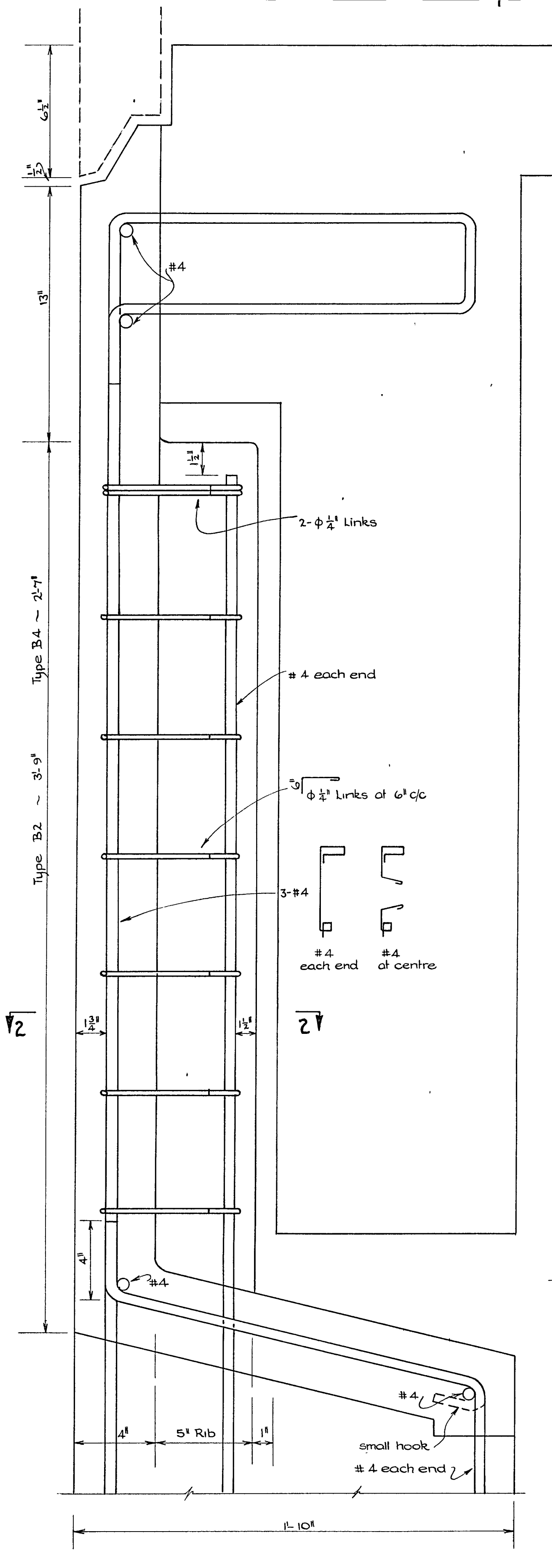

SECTION AT TOP OF TYPE B2 & B4 PANELS SHOWING RIB (NO RIB AT TOP OF B1 & B3 PANELS).

FOR ELEVATION OF PANELS SEE DWG. No. S 65 TO S 68

FOR SURFACE FINISH TO PANELS REFER TO ARCHITECTS DWGS. & SPECIFICATION.

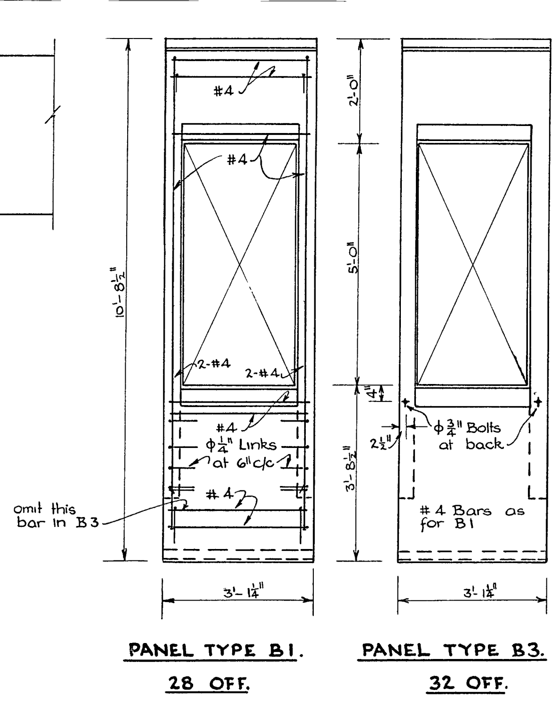

PANEL TYPE B1.

28 OFF.

PANEL TYPE B3.

32 OFF.

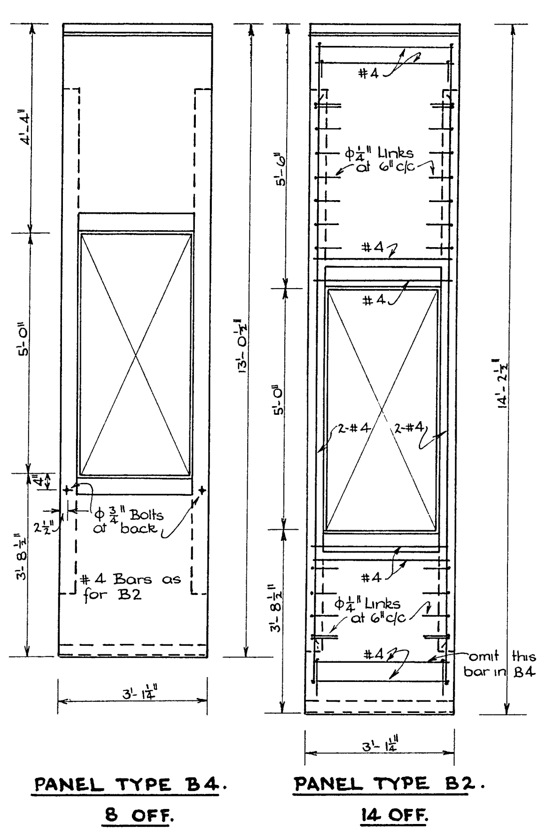

PANEL TYPE B4.

8 OFF.

PANEL TYPE B2.

14 OFF.

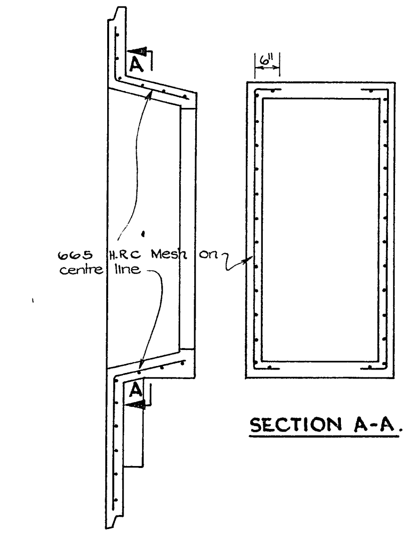

SECTIONS THRU PANEL SHOWING 665 H.R.C. MESH REINFORCING. (Not shown in ¼ Full Size detail for clearness).

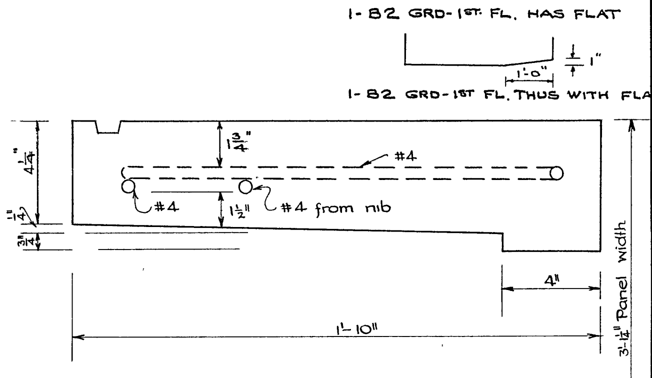

SECTION 1-1.

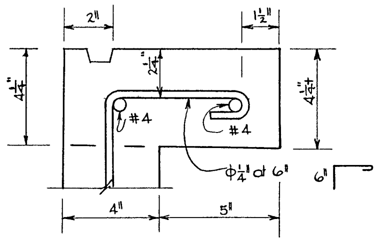

SECTION 2-2.

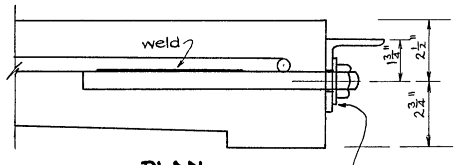

PLAN.

Sq Washer 2" x 2" x 3/16" (Galv)

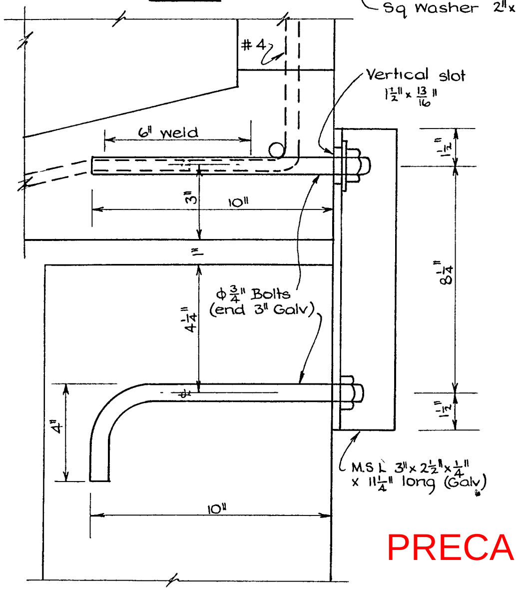

DETAIL OF FIXING FOR TYPE B3 & B4 PANELS.

WELDING.

Where #4 Bars are shown welded form weld with 1 run of 10 gauge electrode on one side and for length shown Weld bolts similarly but on both sides

PRECAST PANEL DRAWINGS

Job No 1848 | Dwg No S.77. | Stage 2.

Notes

Do not scale Use figured dimens
Report any discrepancy to the
architect before proceeding

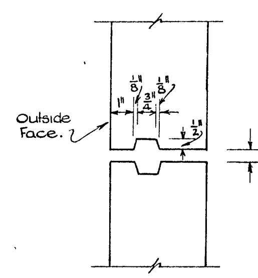

TYPICAL PANEL JOINT

Job No 1848 | Dwg No S.77. | Stage 2.

DETAIL OF PRECA
PANELS TYPE

Designed: E.K.C.
Traced
Drawn R.B.B
Checked
Date JULY 1974
Scale ½" = 1' ¼ Full S

WELLINGTON HOSPI
BOARD
HUTT HOSPITAL
CLINICAL SERVI
AND WARD BL

HAUGHTON AND MAIR
ARCHITECTS'
THE TERRACE
WELLINGTON N Z

EDWARDS, CLENDON & PARTN
CONSULTING ENGINEERS,
48 HOBSON ST.,
WELLINGTON.

Revisions

THIS is one of the Drawings referr
AGREEMENT signed by us this
of 1 OCT 1975 19

EMPLOYER
WITNESS
CONTRACTOR
WITNESS

Job No 1848 | Dwg No S.77. | Stage 2.

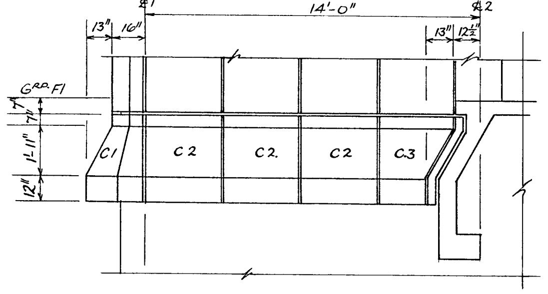

LINE C, 1-2.

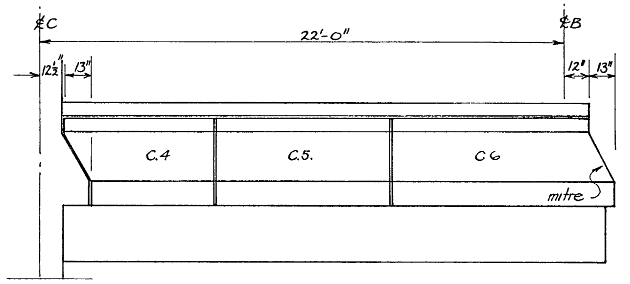

LINE 2, C-B.

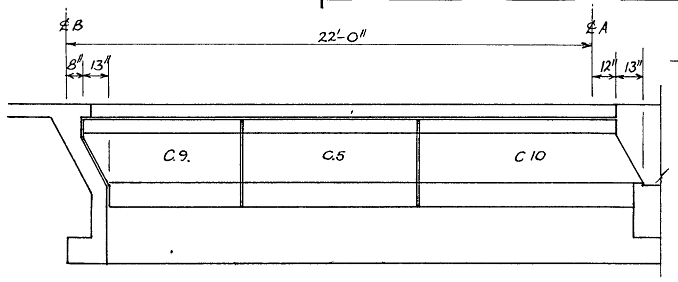

LINE G., B-A.

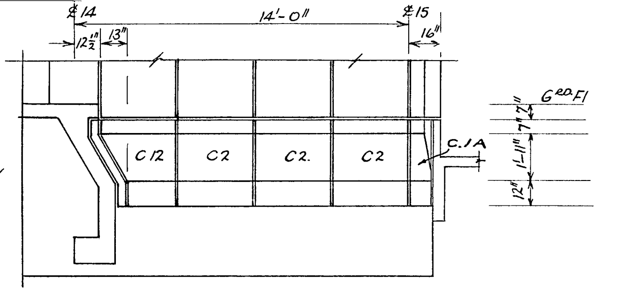

LINE C., 14-15.

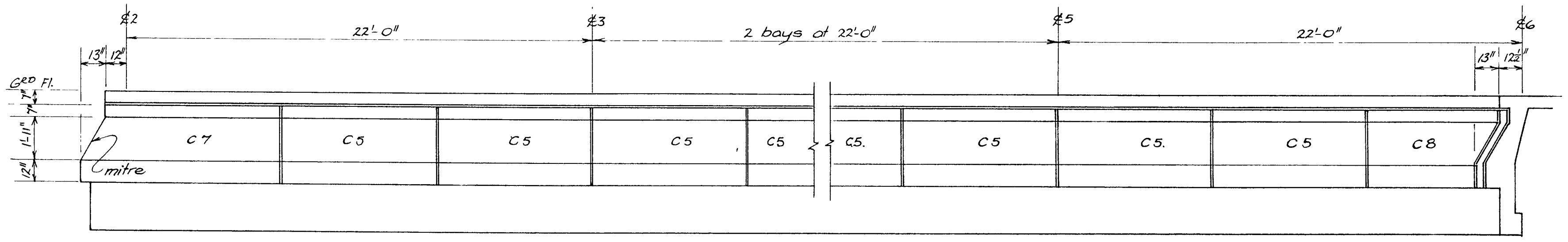

LINE B., 2-6.

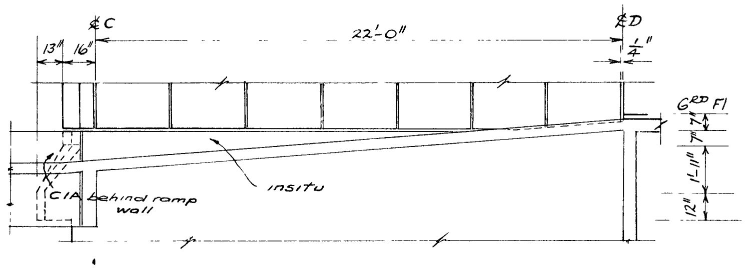

LINE 15, C-D.

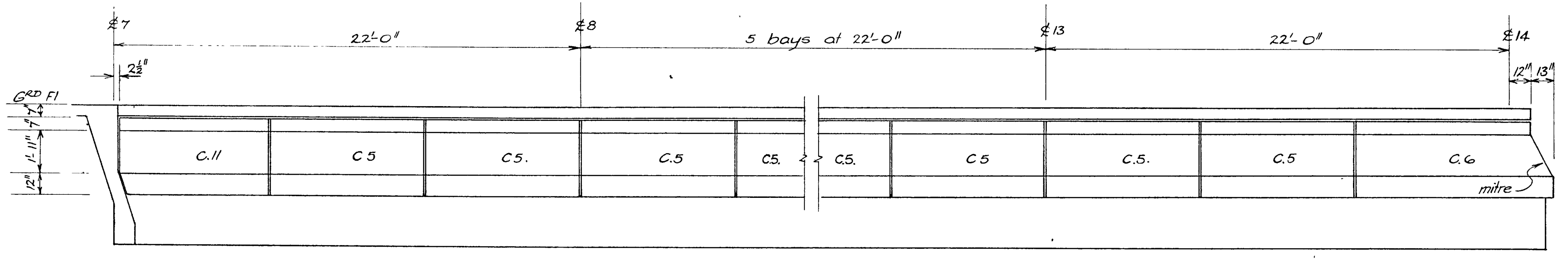

LINE A., 7-14.

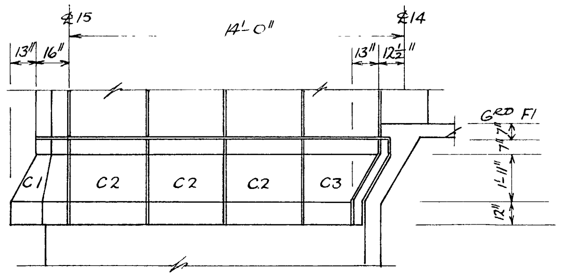

LINE F, 15-14.

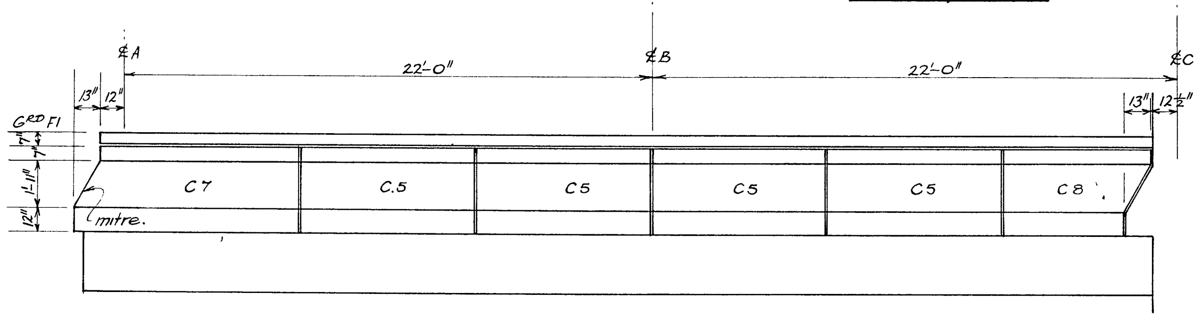

LINE 14, A-C.

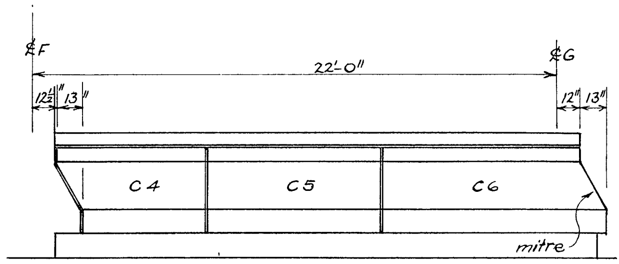

LINE 14., F-G.

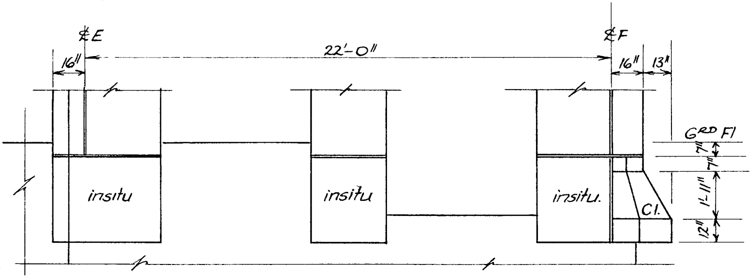

LINE 15., E-F.

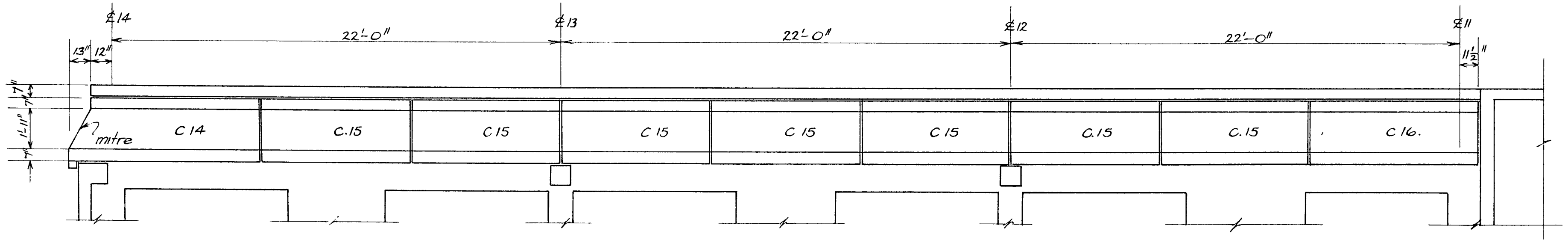

LINE G., 14-11.

Job No. 1848 Dwg No S.78. Stag 2

Notes

Do not scale Use figured dime
Report any discrepancy to th
architect before proceeding

Job No 1848 Dwg No S.78. Stag 2

ELEVATION OF
TYPE 'C' PANE

Designed EKC	Traced
Drawn EKC	Checked
Date JULY. 1974	Scale

WELLINGTON HOSP
BOARD
HUTT HOSPITAL
CLINICAL SERV
AND WARD BL

HAUGHTON AND MAIR
ARCHITECTS
THE TERRACE
WELLINGTON N Z

EDWARDS, CLENDON & PA
CONSULTING ENGINEERS
48 HOBSON ST,
WELLINGTON

Revisions

THIS is one of the Drawings refe
AGREEMENT signed by us this
of - 1 OCT 1975 19

EMPLOYER ....
WITNESS ....
CONTRACTOR DOWNER and CO.
WITNESS

Job No 1848 Dwg No S.78 Stag 2

PRECAST PANEL DRAWINGS

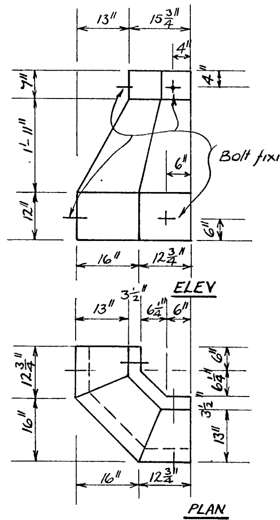

C1 - 2 OFF.

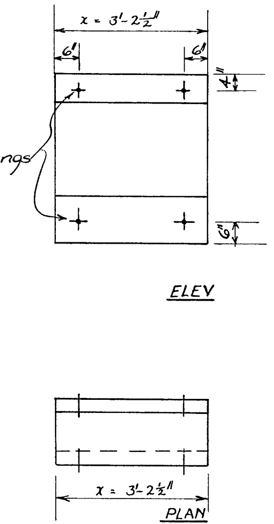

C2 - 9 OFF

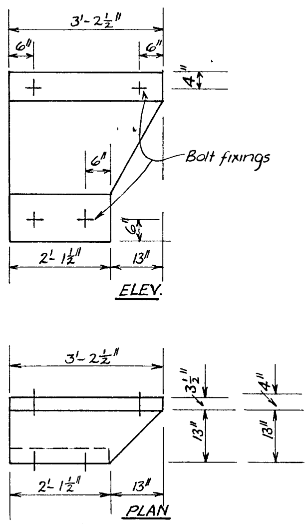

C3 - 2 OFF

C12 Opposite Hand - 1 OFF.

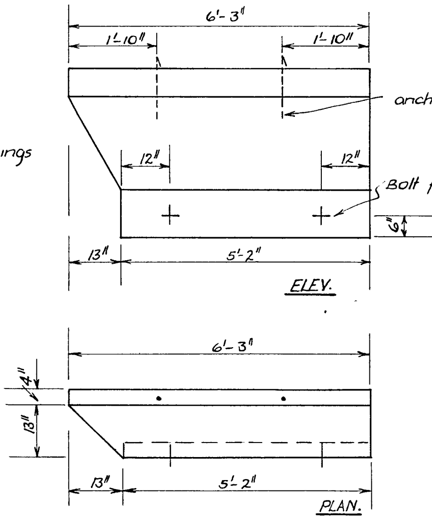

C4 - 2 OFF.

C8 Opposite Hand - 2 OFF.

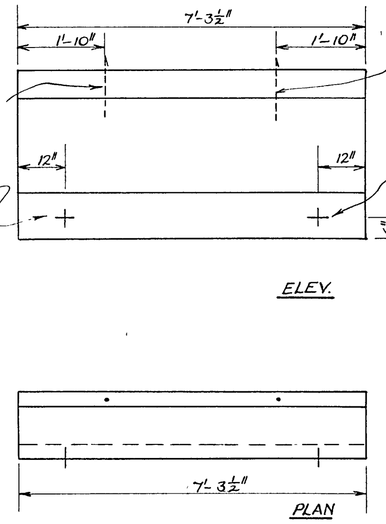

C5 - 36 OFF.

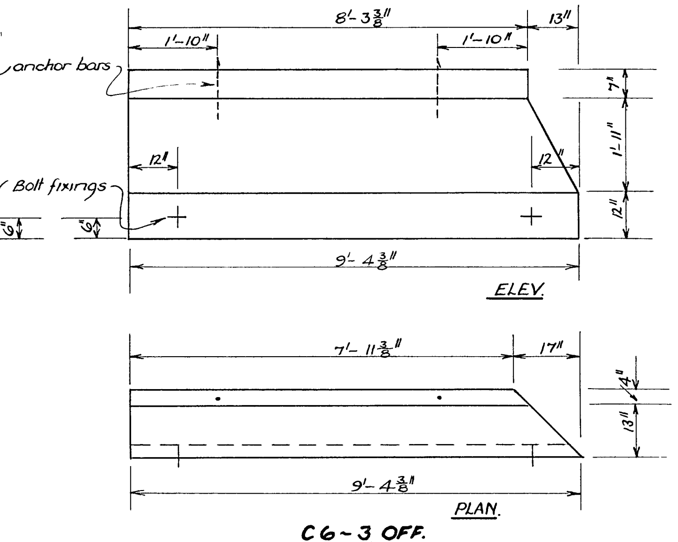

C6 - 3 OFF.

C7 Opposite Hand - 2 OFF.

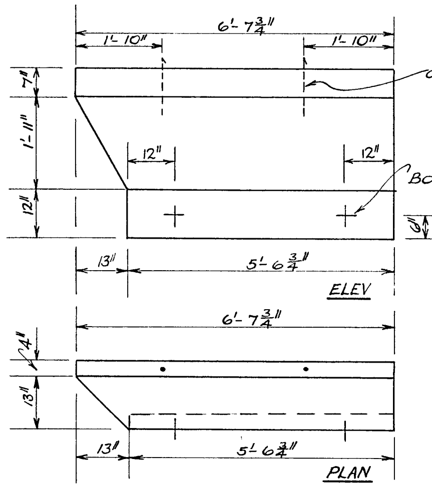

C9 - 1 OFF.

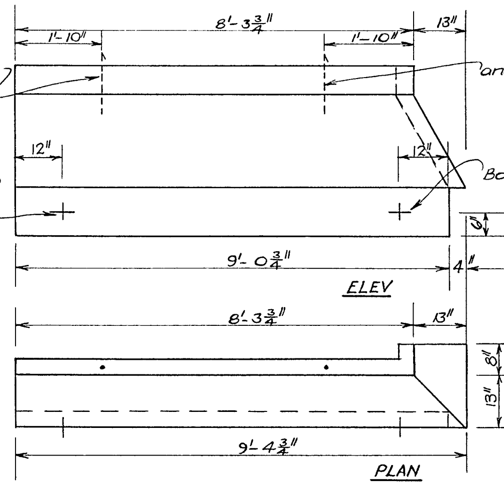

C10 - 1 OFF.

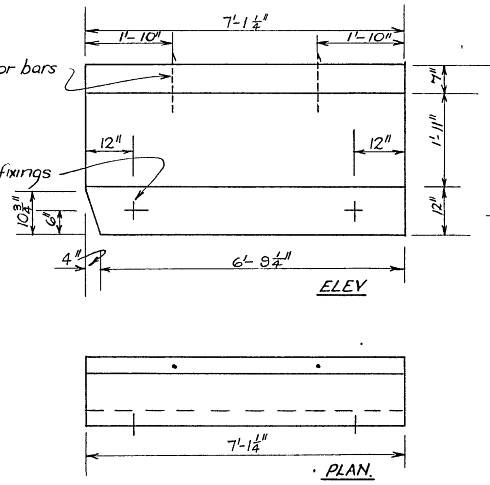

C11 - 1 OFF.

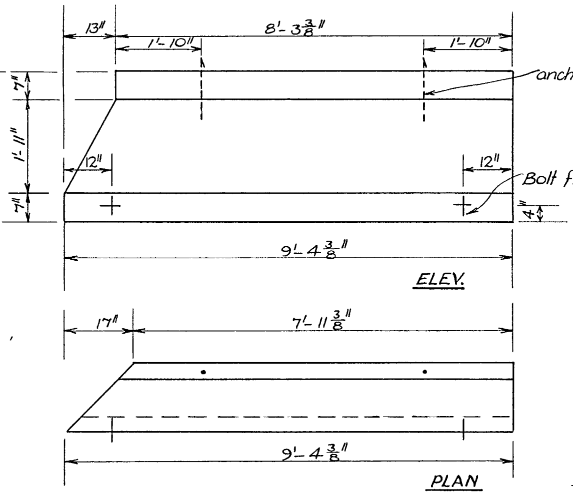

C14 - 1 OFF.

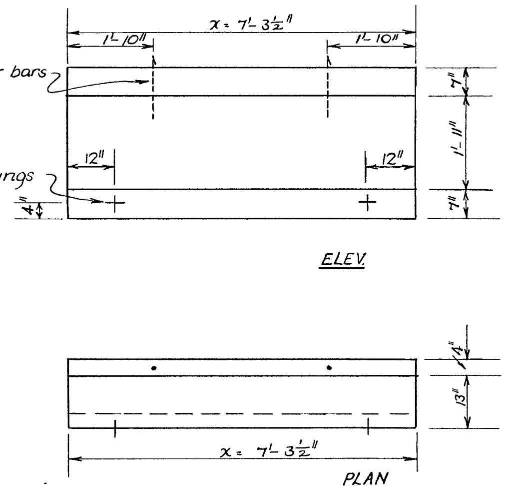

C15 ~ 7 OFF.

C16 Similar but x = 8'-3 1/4" ~ 1 OFF.

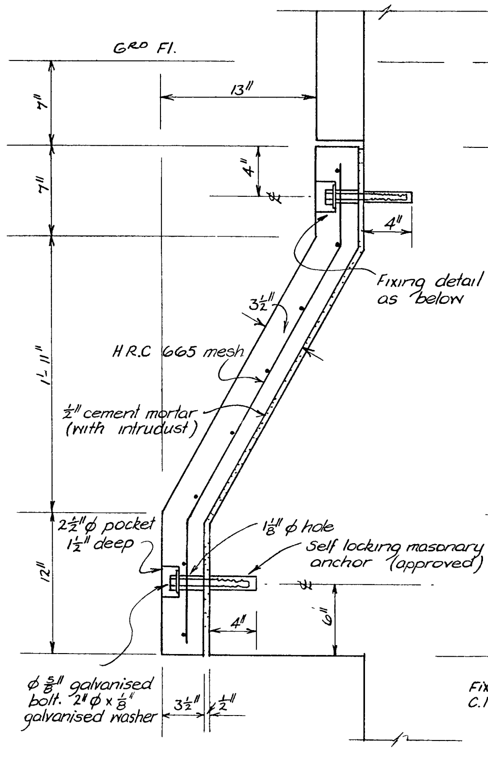

PANELS C1, C2, C3, C12.

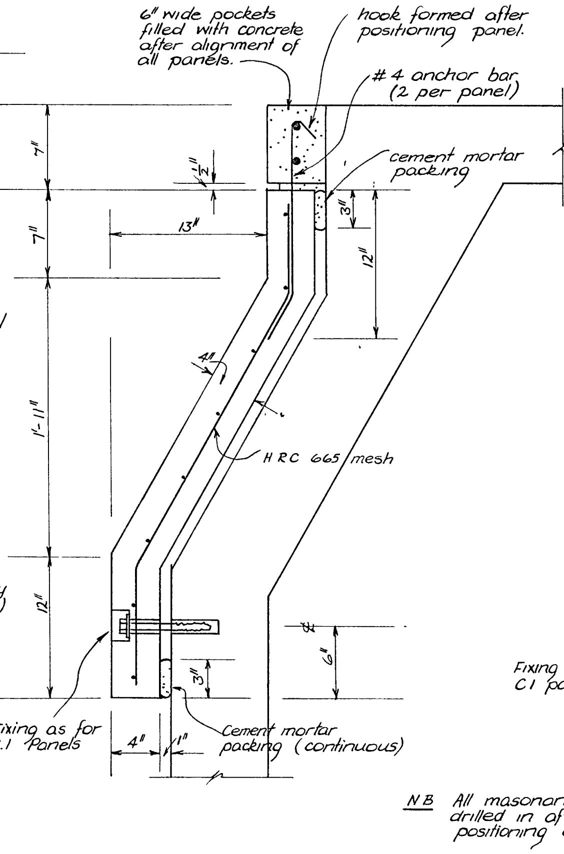

PANELS C4-C11.

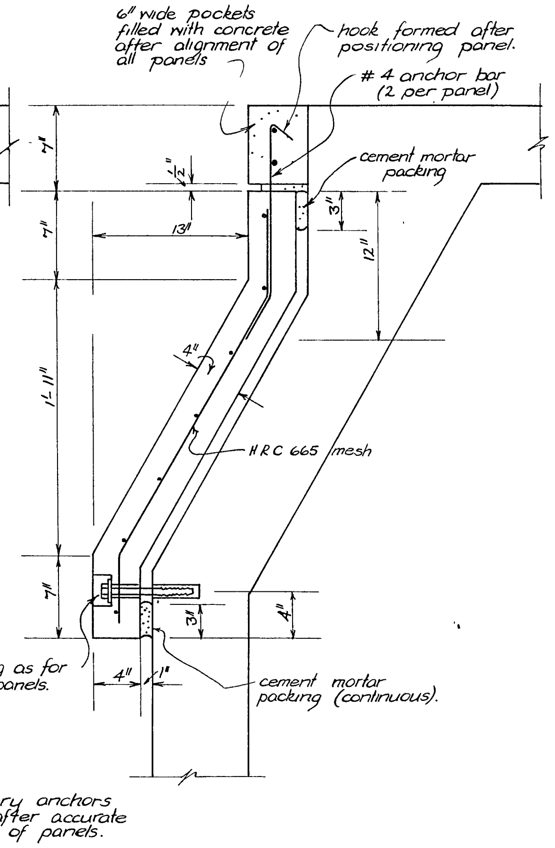

N B All masonary anchors drilled in after accurate positioning of panels.

PANELS C14, C15, C16.

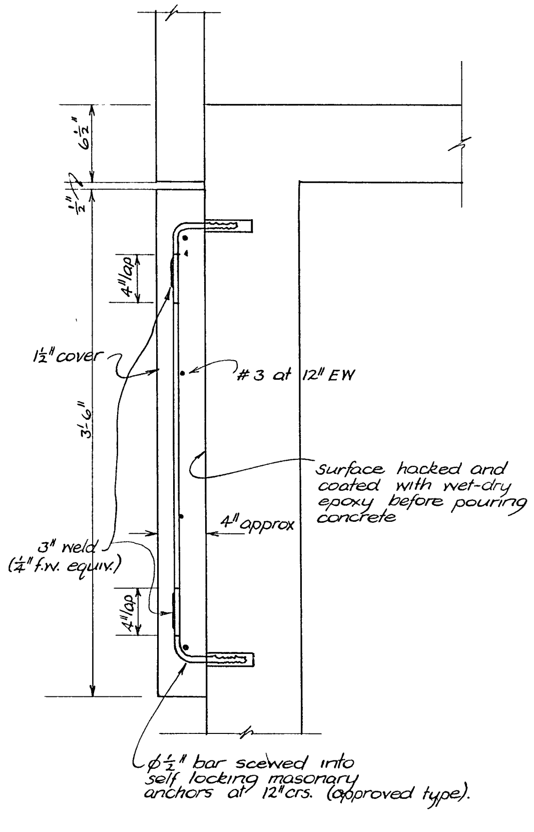

TYPICAL DETAIL OF INSITU FACING SLAB LINE 15.

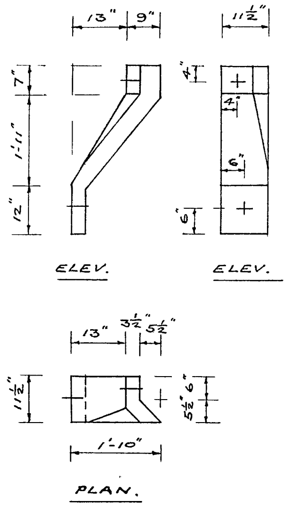

C.I.A. 1 OFF.

Job No 1848 | Dwg No S.78A | Stag 2.

Notes

Do not scale Use figured dime
Report any discrepancy to th
architect before proceeding

Job No 1848 | Dwg No S.78A | Stag 2

TYPE 'C' PANE

Designed EKC
Traced JO
Drawn EKC
Checked
Date JULY 1974
Scale 1/2" =
1/8 Full si

WELLINGTON HOSP
BOARD
HUTT HOSPITAL
CLINICAL SERV
AND WARD BL

HAUGHTON AND MAIR
ARCHITECTS
THE TERRACE
WELLINGTON N Z

EDWARDS. CLENDON & PART
CONSULTING ENGINEERS,
48 HOBSON ST,
WELLINGTON

Revisions

THIS is one of the Drawings refer
AGREEMENT signed by us this
of - 1 OCT 1975 19

EMPLOYER
WITNESS
CONTRACTOR DOWNER and CO.
WITNESS

Job No 1848 | Dwg No S.78A | Stag 2.

PRECAST PANEL DRAWINGS

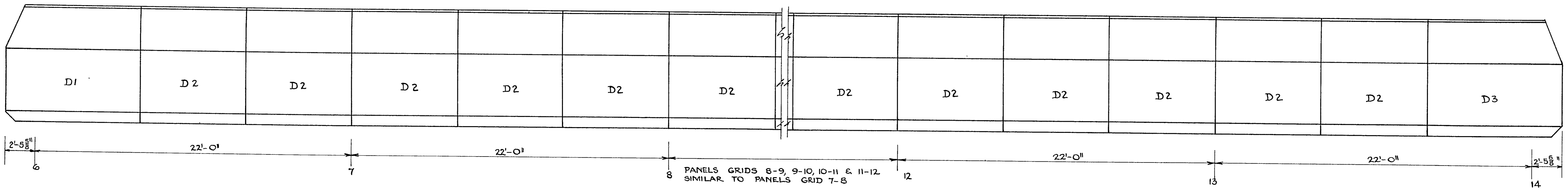

ELEVATION OF PRECAST PANELS ON GRID A. 6 TO 14.

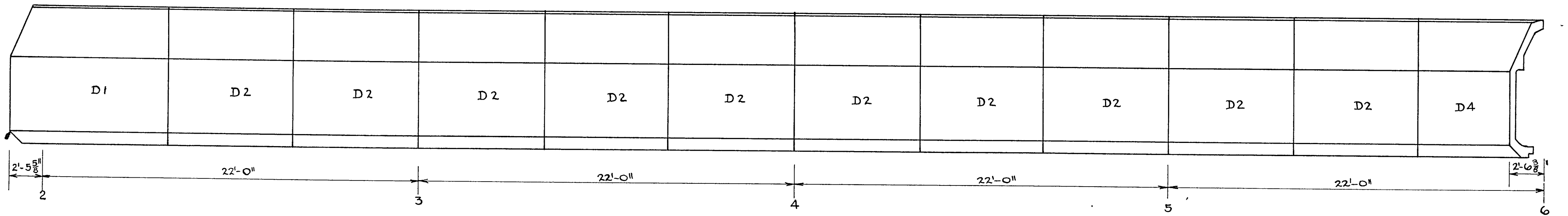

ELEVATION OF PRECAST PANELS ON GRID B. 2 TO 6.

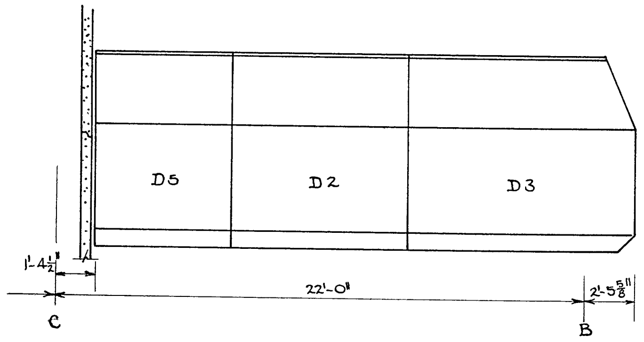

ELEVATION OF PRECAST PANELS ON GRID 2. C TO B.
PANELS ON GRID 14 F TO G SIMILAR.

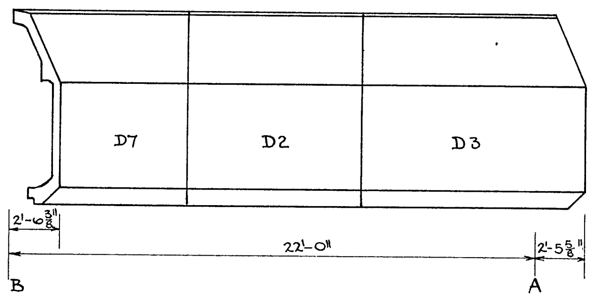

ELEVATION OF PRECAST PANELS ON GRID 6. B TO A.

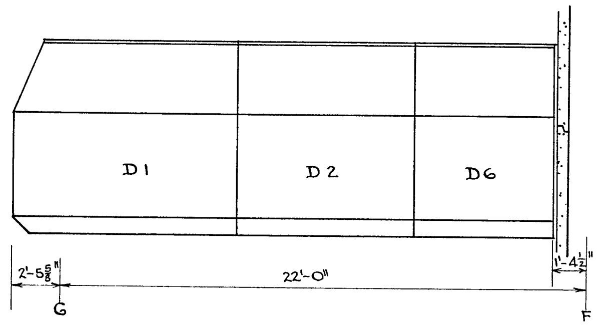

ELEVATION OF PRECAST PANELS ON GRID 2 G TO F.

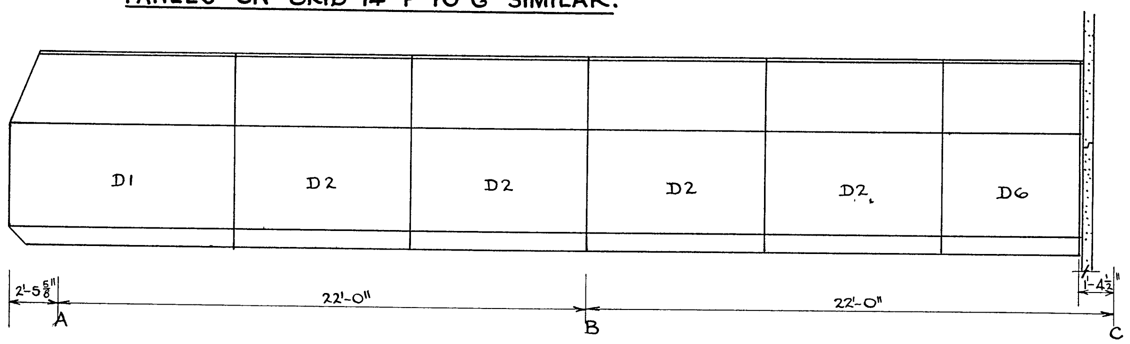

ELEVATION OF PRECAST PANELS ON GRID 14. A TO C.

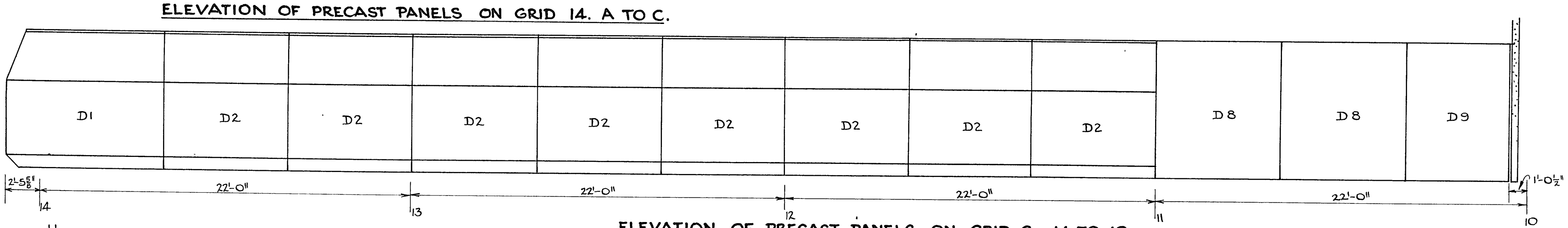

ELEVATION OF PRECAST PANELS ON GRID G. 14 TO 10.

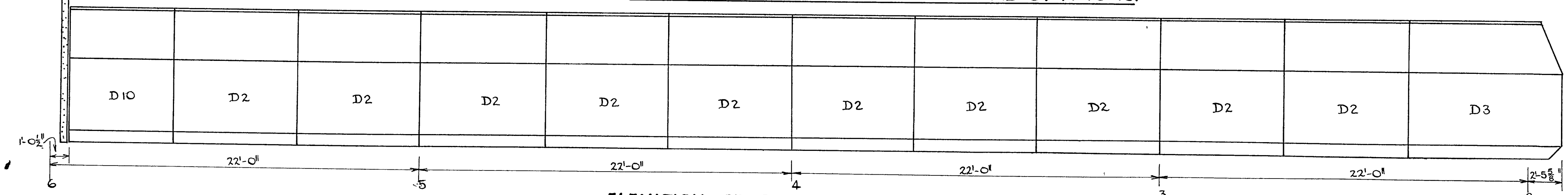

ELEVATION OF PRECAST PANELS ON GRID G. 6 TO 2.

PRECAST PANEL DRAWINGS

Notes

Do not scale Use figured dime
Report any discrepancy to th
architect before proceeding

Job No	Dwg No	Stage
1848	S.79.	2.

ELEVATION OF FIRST
FLOOR PRECAST PAN
TYPE 'D.'

Designed E.K.C	Traced J O
Drawn R.B.B	Checked E.
Date JULY 1974	Scale ¼" = 1'-

WELLINGTON HOSPI
BOARD
HUTT HOSPITAL
CLINICAL SERVI
AND WARD BL

HAUGHTON AND MAIR
ARCHITECTS
THE TERRACE
WELLINGTON N Z

EDWARDS, CLENDON & PARTNE
CONSULTING ENGINEERS,
48 HOBSON ST.
WELLINGTON

Revisions

THIS is one of the Drawings refer
AGREEMENT signed by us this
of 1 OCT 1975 9

EMPLOYER
WITNESS
CONTRACTOR DOWNER and CO.
WITNESS

Job No	Dwg No	Stage
1848	S.79.	2.

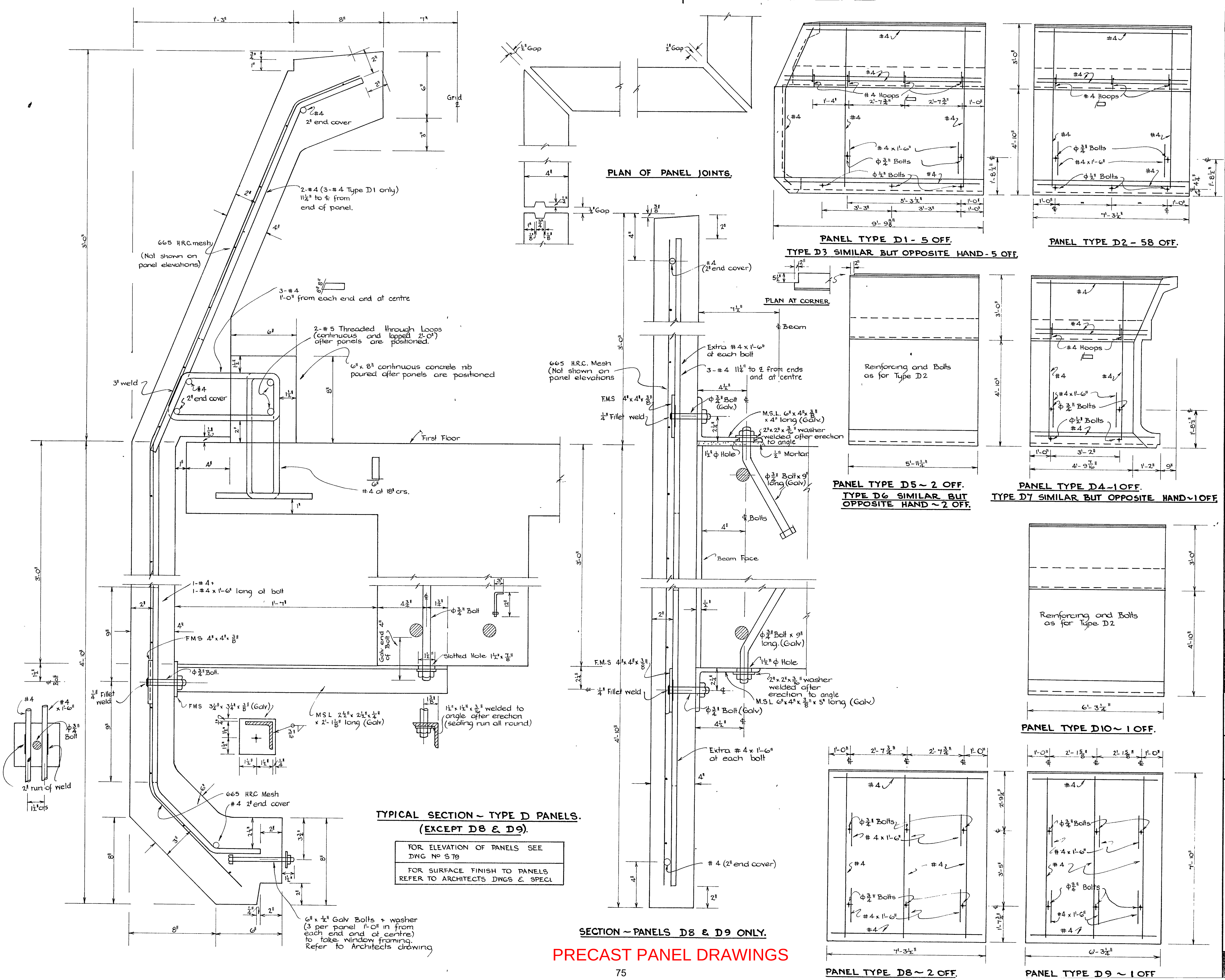

PRECAST PANEL DRAWINGS

Job No
1848

Dwg No
S.80.

Sta

Notes

Do not scale Use figured dim
Report any discrepancy to t
architect before proceeding

Job No
1848

Dwg No
S.80.

Stage

REINFORCING

FIRST FLOOR PREC
PANELS TYPE `D

Designed EKC

Traced

Drawn RBB

Checked

Date JULY. 1974

Scale ½" =
¼ Full S

WELLINGTON HOSP
BOARD
HUTT HOSPITAL
CLINICAL SERV
AND WARD BL

HAUGHTON AND MAIR
ARCHITECTS
THE TERRACE
WELLINGTON N Z

EDWARDS, CLENDON & PARTN
CONSULTING ENGINEERS,
48 HOBSON ST,
WELLINGTON

Revisions

THIS is one of the Drawings ref
AGREEMENT signed by us thi
of 1 OCT 1975 19

EMPLOYER

WITNESS

CONTRACTOR DOWNER and CO

WITNESS

Job No
1848

Dwg No
S.80.

Stage
2.

Job No.	Dwg No	Stag
1848	S.81.	2

Notes

Do not scale Use figured dim
Report any discrepancy to t
architect before proceeding

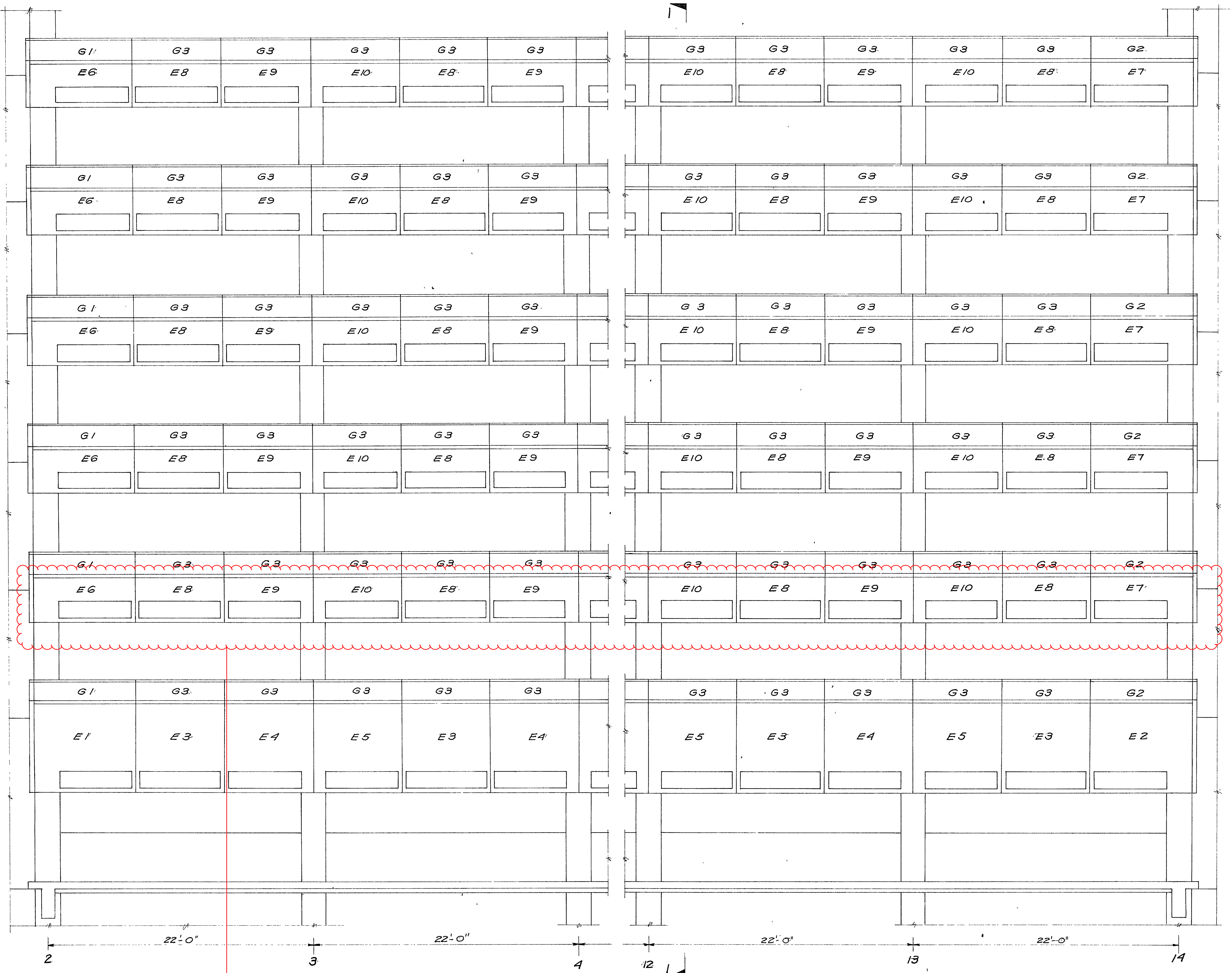

TYPE F USED IN CONSTUCTION AS PER GRID F
TYPICAL ALL LEVELS

PANELS - GRIDS 4-5, 5-6, 6-7, 7-8, 8-9, 9-10, 10-11 & 11-12 SIMILAR TO PANELS GRID 3-4.

ELEVATION OF PRECAST PANELS ON GRID 'C' 2 TO 14.

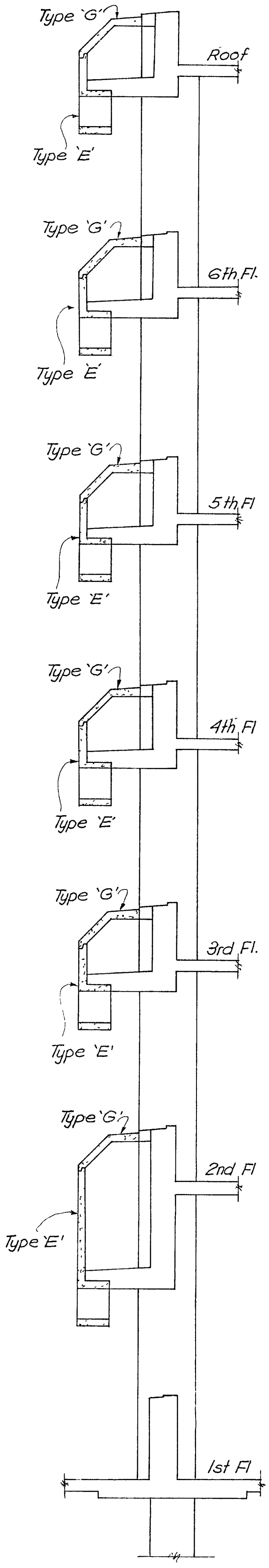

SECTION 1-1

FOR DETAIL OF PANELS
SEE DWG No S 84 to S 87

PRECAST PANEL DRAWINGS

Job No	Dwg No	Stag
1848	S.81.	2

PRECAST PANEL
2ND FLOOR TO ROO
GRID 'C' 2 TO 14.

Designed E.K.C.	Traced
Drawn R.B.B	Checked
Date JULY 1974.	Scale 1/4" =

WELLINGTON HOSP
BOARD
HUTT HOSPITAL
CLINICAL SERV
AND WARD B

HAUGHTON AND MAIR
ARCHITECTS
THE TERRACE
WELLINGTON N Z

EDWARDS, CLENDON & P
CONSULTING ENGINEER
48 HOBSON ST,
WELLINGTON

Revisions

THIS is one of the Drawings re
AGREEMENT signed by us th
of 1 OCT 1975 19

EMPLOYER
WITNESS
DOWNER and CO.
CONTRACTOR
WITNESS

Job No	Dwg No	Stag
1848	S.81.	2

Job No 1848 | Dwg No S.82 | Stage 2

Notes

Do not scale Use figured dime
Report any discrepancy to th
architect before proceeding
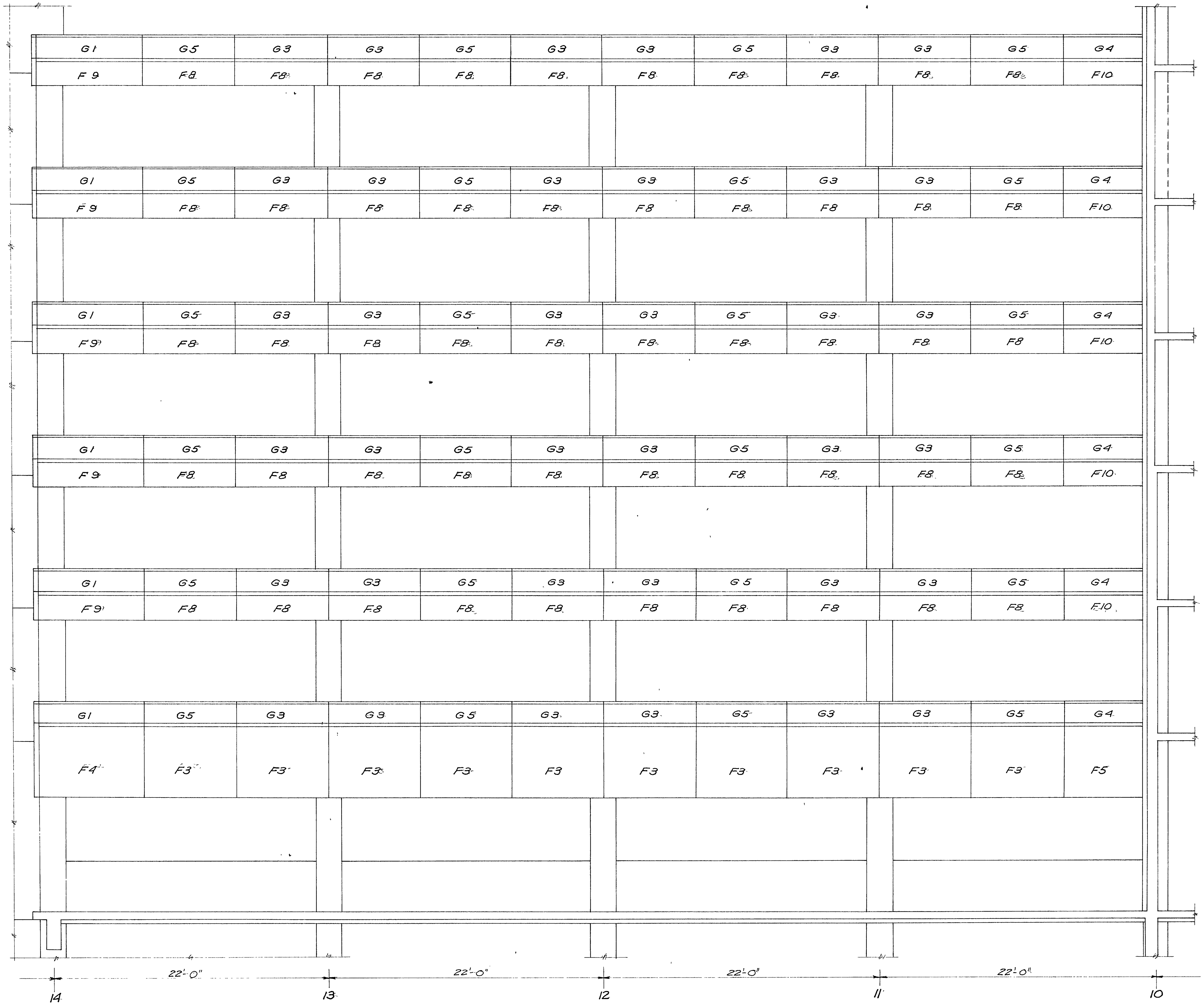
ELEVATION OF PRECAST PANELS ON GRID 'F' 14 TO 10

FOR DETAIL OF PANELS
SEE DWG NOS S 84 to S 87.

PRECAST PANEL DRAWINGS

Job No 1848 | Dwg No S.82. | Stage 2

PRECAST PANEL
2ND FLOORTO RO
GRID 'F' 14 TO

Designed EKC	Traced
Drawn RBB	Checked
Date JULY . 1974	Scale $\frac{1}{4}$" =

WELLINGTON HOSP
BOARD
HUTT HOSPITAL
CLINICAL SERV
AND WARD BL

HAUGHTON AND MAIR
ARCHITECTS
THE TERRACE
WELLINGTON N Z

EDWARDS, CLENDON & PAR
CONSULTING ENGINEERS
48 HOBSON ST,
WELLINGTON

Revisions

THIS is one of the Drawings re
AGREEMENT signed by us th
of - 1 OCT 1974 19

EMPLOYER
WITNESS
DOWNER and CO
CONTRACTOR
WITNESS

Job No 1848 | Dwg No S.82. | Stage 2

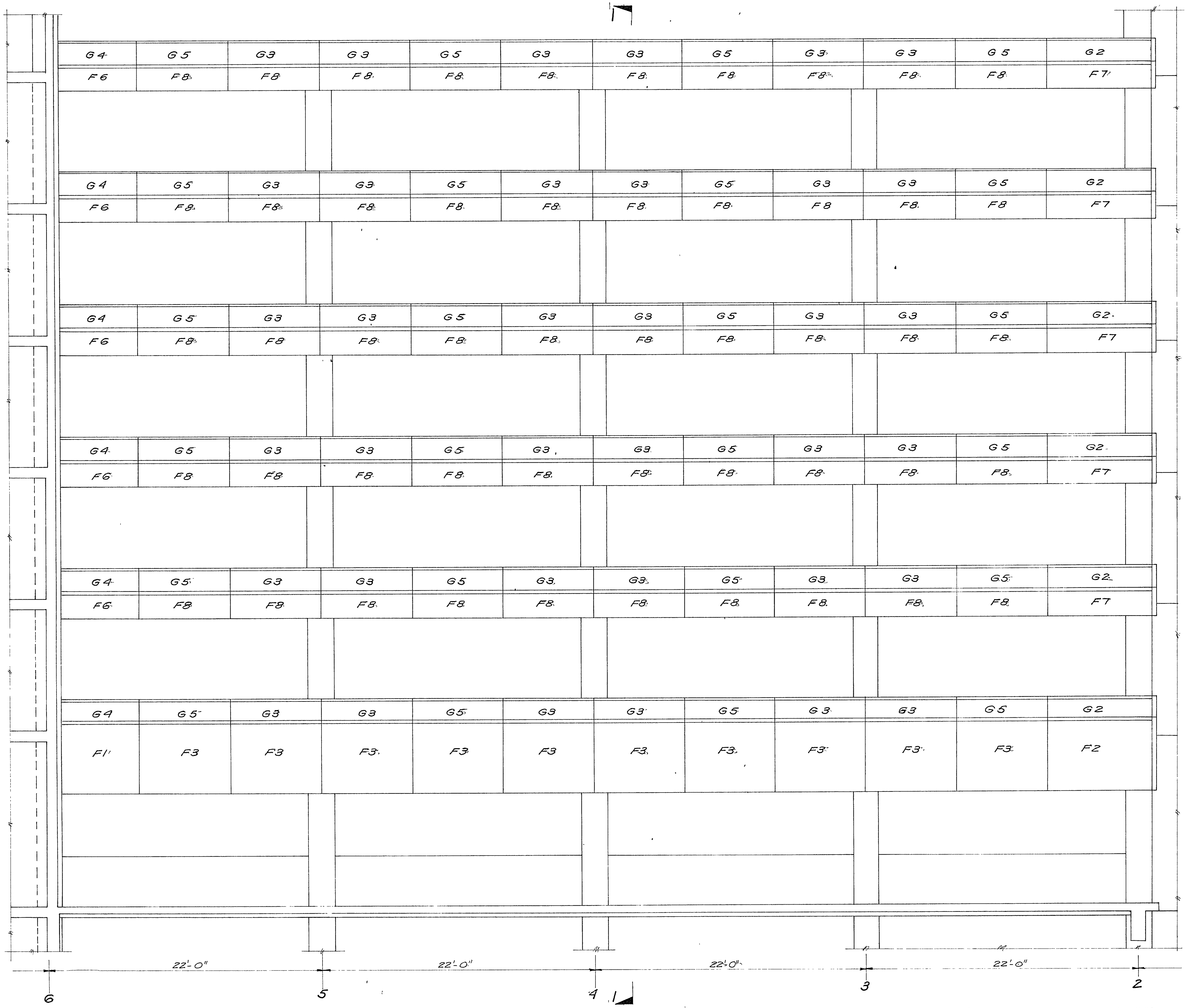

ELEVATION OF PRECAST PANELS ON GRID 'F' 6 TO 2

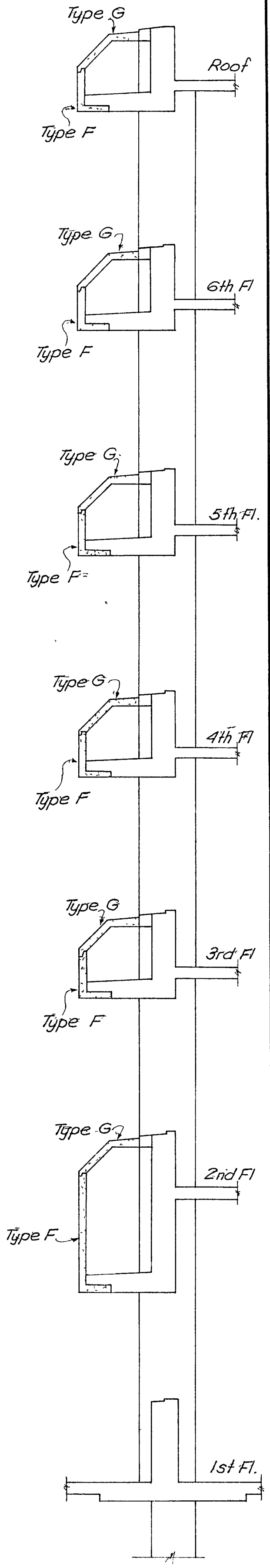

SECTION 1-1

FOR DETAIL OF PANELS SEE DWG No S.84 to S 87.

PRECAST PANEL DRAWINGS

Job No	Dwg No	Stag
1848	S.83	2

Notes

Do not scale Use figured dime
Report any discrepancy to th
architect before proceeding

Job No	Dwg No	Stag
1848	S.83.	2

PRECAST PANEL
2ND FLOOR TO ROO
GRID 'F' 6 TO 2.

Designed EKC	Traced M F
Drawn RBB	Checked £
Date JULY 1974	Scale 1/4" = 1

WELLINGTON HOSP
BOARD
HUTT HOSPITAL
CLINICAL SERV
AND WARD BI

HAUGHTON AND MAIR
ARCHITECTS
THE TERRACE
WELLINGTON N Z

EDWARDS, CLENDON & PAR
CONSULTING ENGINEER
48 HOBSON ST,
WELLINGTON

Revisions

THIS Is one of the Drawings re
AGREEMENT signed by us th
of 1 OCT 1975

EMPLOYER
WITNESS
CONTRACTOR DOWNER and CO
WITNESS

Job No	Dwg No	Stag
1848	S.83.	2

Job No	Dwg No	Stage
1848	S.84	2.

Notes

Do not scale Use figured dimens
Report any discrepancy to the
architect before proceeding

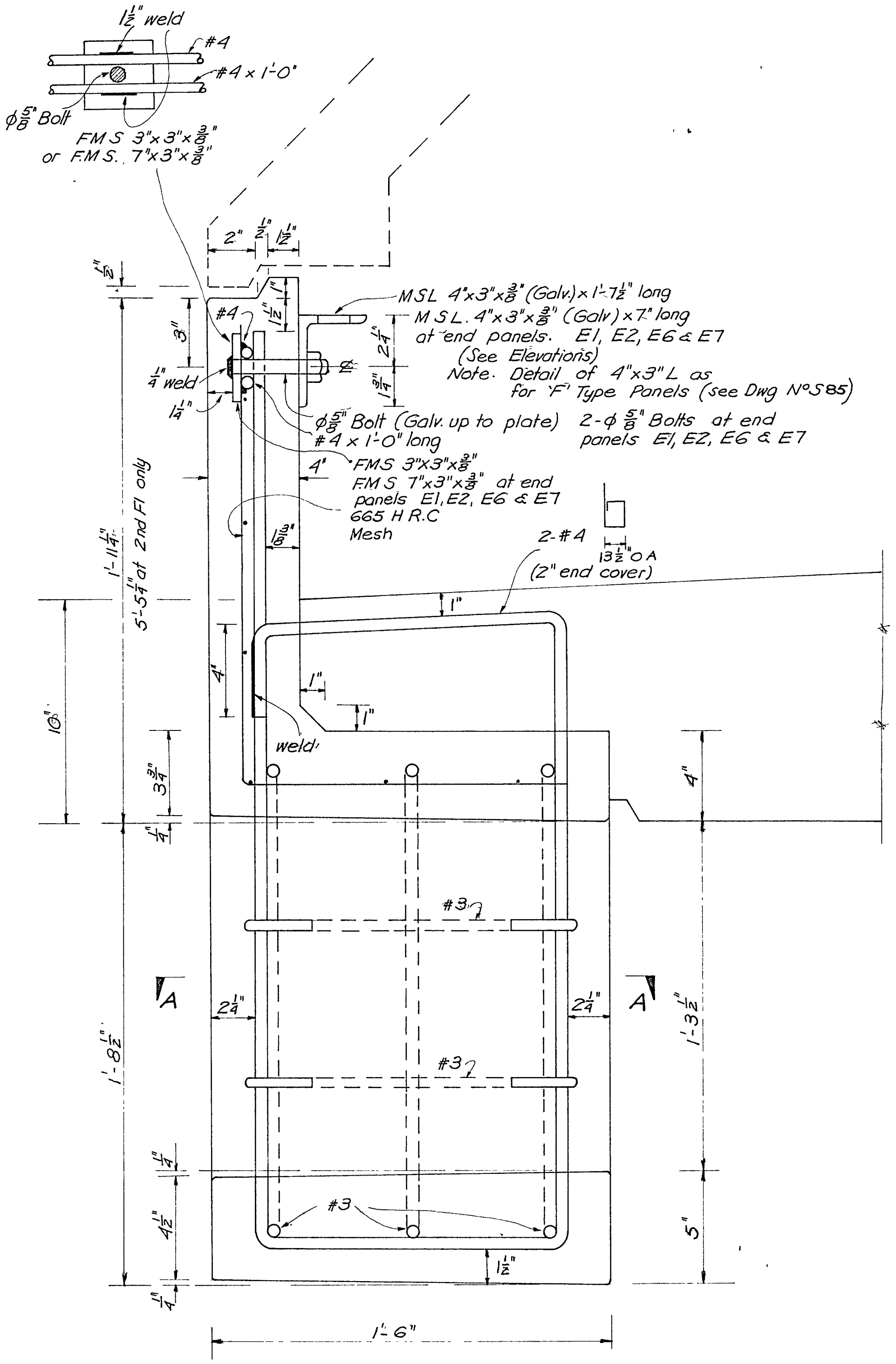

TYPICAL SECTION - AT END - TYPE 'E' PANELS

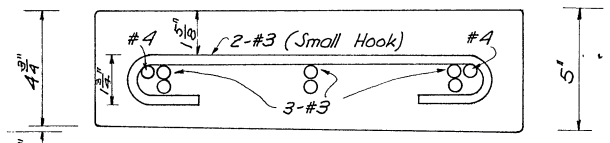

SECTION A-A TYPICAL PANEL

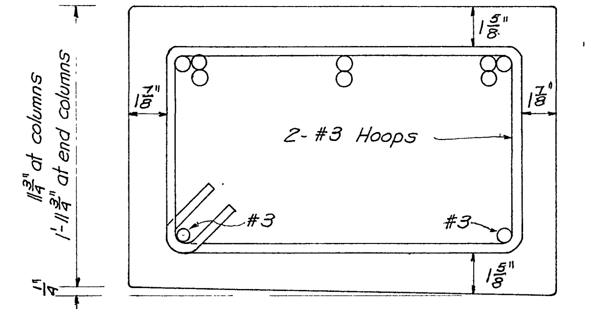

SECTION A-A - PANELS AT COLUMNS

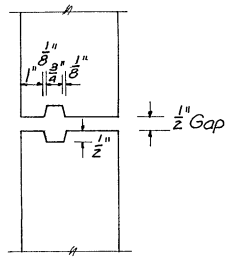

PLAN AT PANEL JOINTS

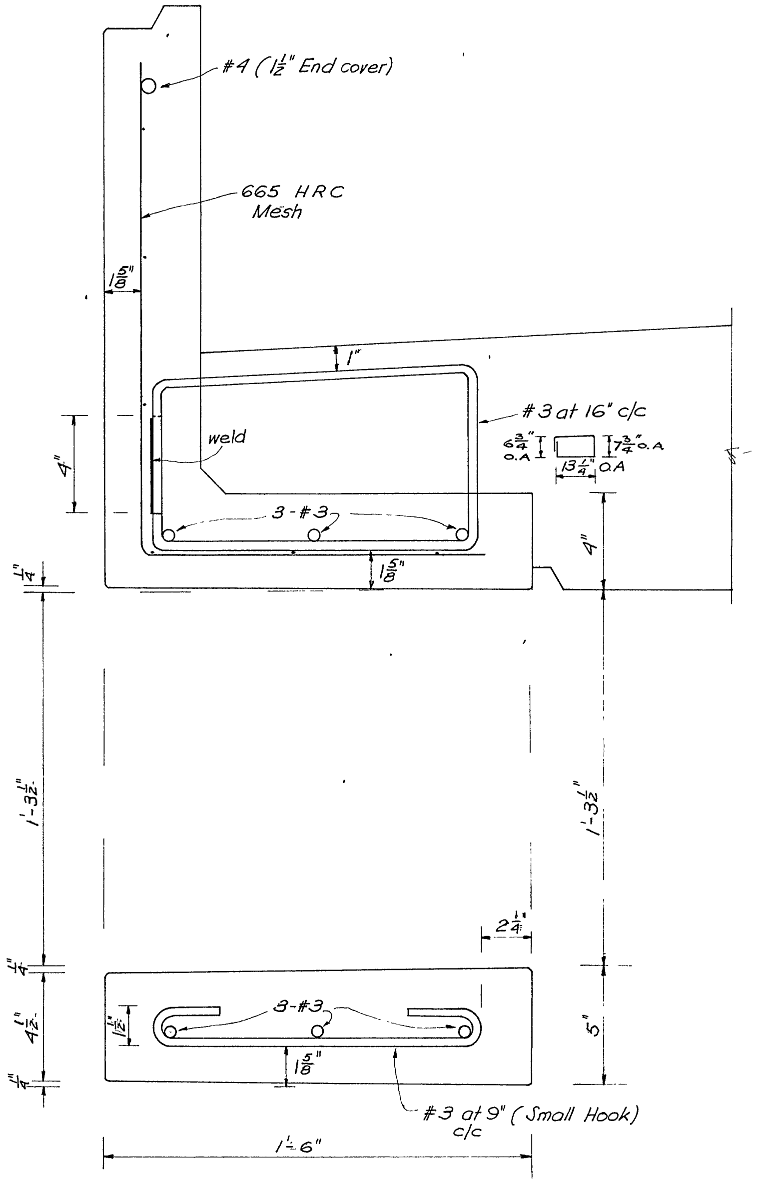

TYPICAL SECTION - AT CENTRE - TYPE 'E' PANELS

FOR ELEVATION OF PANELS SEE DWG Nº S 81

FOR SURFACE FINISH TO PANELS REFER TO ARCHITECTS DWGS & SPECI

Welds where shown shall be 1 run with Nº 10 gauge electrode on one side only unless shown otherwise

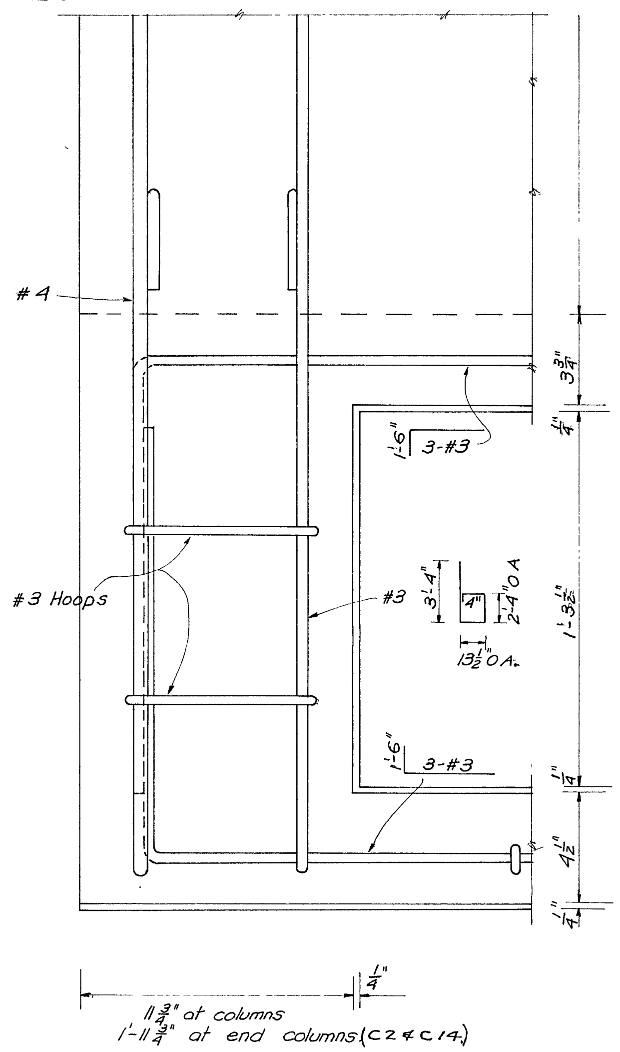

END ELEVATION - PANELS AT COLUMNS

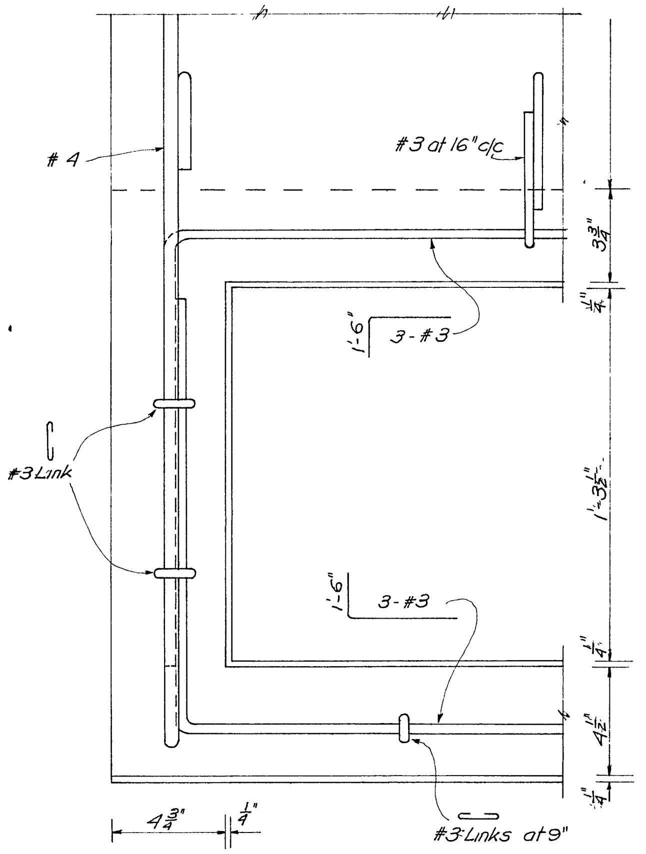

END ELEVATION - TYPICAL PANEL

PRECAST PANEL DRAWINGS

Job No	Dwg No	Stage
1848	S.84	2.

REINFORCING
PRECAST PANEL
TYPE 'E'

Designed: E.K.C	Traced: M.
Drawn: R.B.B.	Checked
Date JULY 1974	Scale ¼" F

WELLINGTON HOSPI
BOARD
HUTT HOSPITAL
CLINICAL SERVI
AND WARD BL

HAUGHTON AND MAIR
ARCHITECTS
THE TERRACE
WELLINGTON N Z

EDWARDS, CLENDON & PAR
CONSULTING ENGINEERS
48 HOBSON ST,
WELLINGTON

Revisions

THIS is one of the Drawings refer
AGREEMENT signed by us this
of 1 OCT 1975 19
EMPLOYER
WITNESS
CONTRACTOR DOWNER & CO.
WITNESS

Job No	Dwg No	Stage
1848	S.84	2

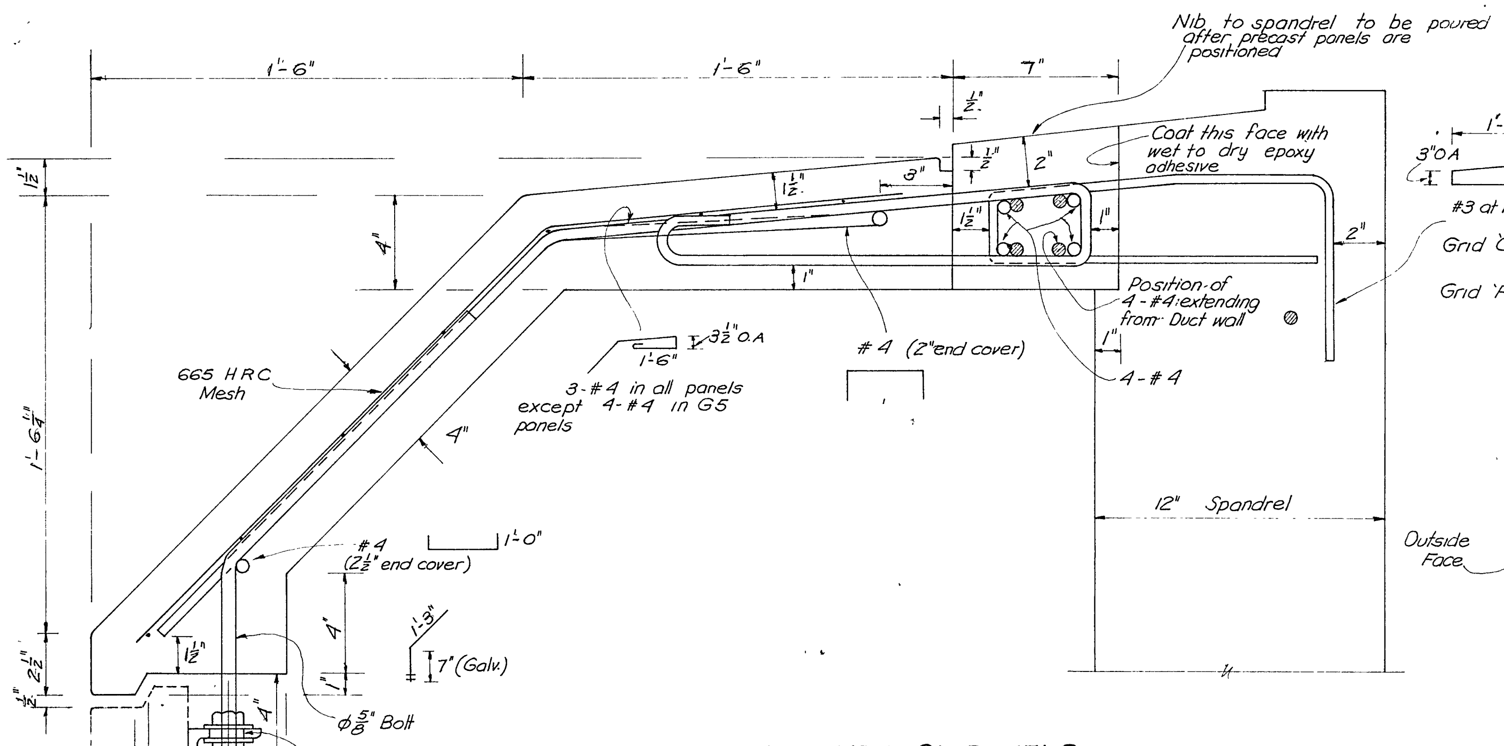

TYPICAL SECTION – TYPE 'G' PANELS

3"OA
1'-2½"OA.
8"
#3 at 12"
Grid 'C' - 6" from each column and at 12" crs between.
Grid 'F' 6" from each column and vertical duct and approx 11" crs between

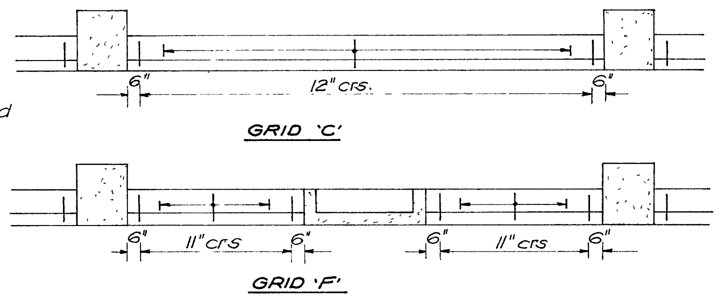

GRID 'C'

GRID 'F'

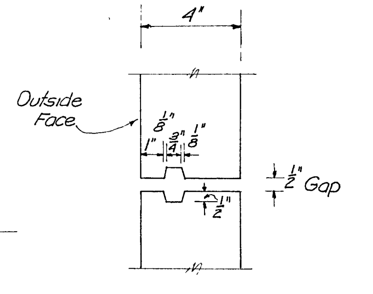

PLAN AT PANEL JOINTS

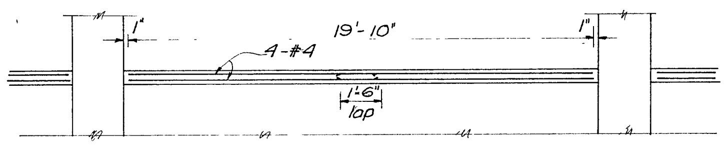

Thread 4-#4 bars into position after precast panels are positioned

SPANDREL NIB – GRID 'C'

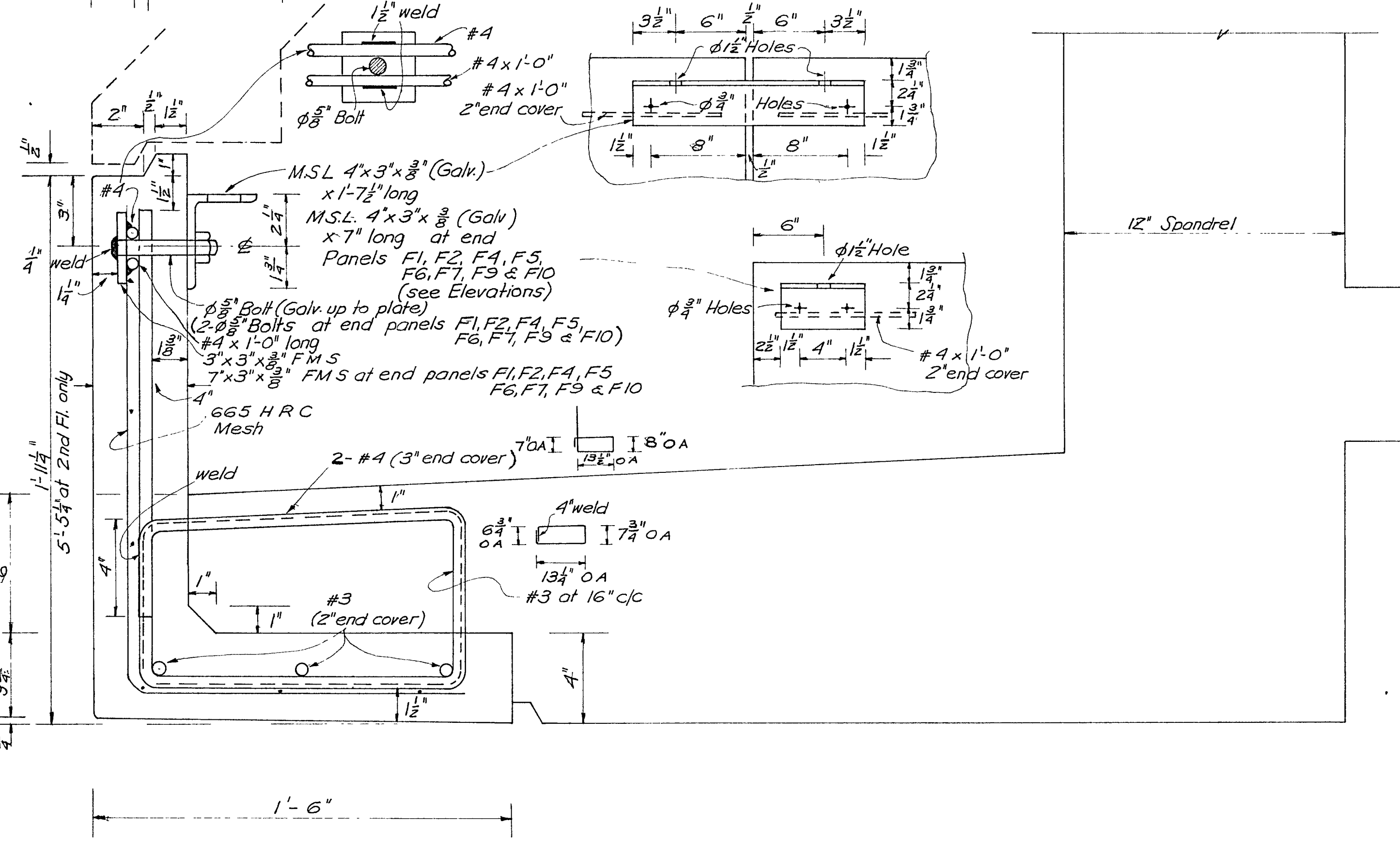

TYPICAL SECTION – TYPE 'F' PANELS

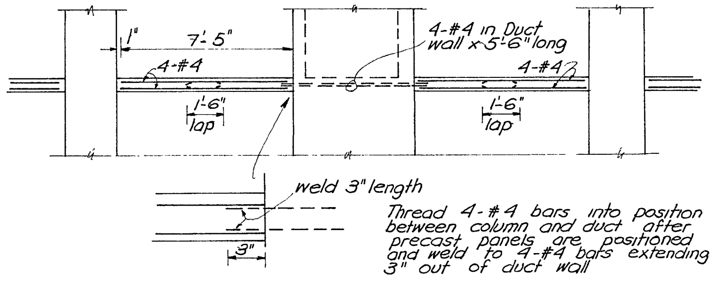

Thread 4-#4 bars into position between column and duct after precast panels are positioned and weld to 4-#4 bars extending 3" out of duct wall

SPANDREL NIB – GRID 'F'

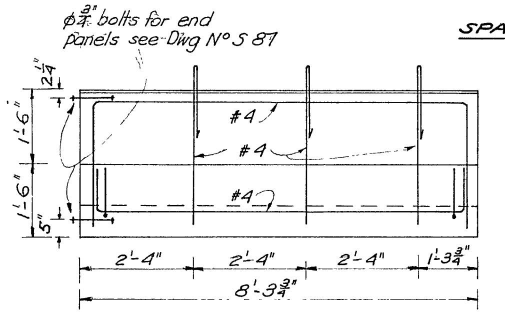

TYPE G1 PANEL - 12 OFF

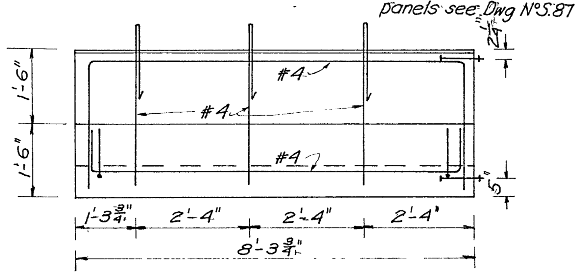

TYPE G2 PANEL - 12 OFF

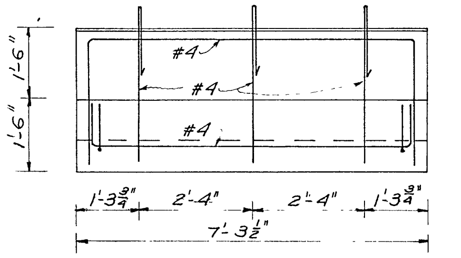

TYPE G 3 PANEL - 276 OFF

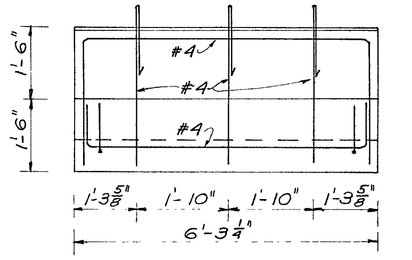

TYPE G4 PANELS - 12 OFF

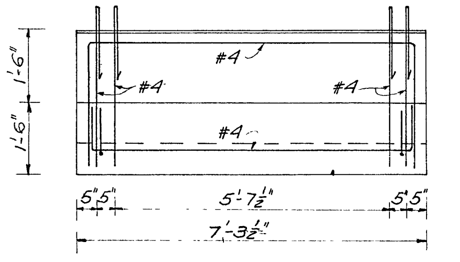

TYPE G5 PANELS - 48 OFF

PLAN OF TYPE 'G' PANELS
SHOWING POSITION OF REINFORCING

NOTE 665 HRC MESH NOT SHOWN

FOR ELEVATION OF PANELS SEE DWG. N° S.81 TO S 83

FOR SURFACE FINISH TO PANELS REFER TO ARCHITECTS DWGS. & SPECI

Welds where shown shall be 1 run with N° 10 gauge electrode on one side only unless shown elsewere

PRECAST PANEL DRAWINGS

Job No	Dwg No	Stage
1848	S.85	2

Notes

Do not scale Use figured dimen
Report any discrepancy to the
architect before proceeding

Job No	Dwg No	Stage
1848	S.85.	2

REINFORCING:
PRECAST PANEL
TYPES 'F' & 'G'.

Designed E.K.C	Traced M
Drawn: R B.B	Checked E
Date JULY 1974	Scale: ½" = 1'-0", ¼

WELLINGTON HOSP
BOARD
HUTT HOSPITAL
CLINICAL SERV
AND WARD BL

HAUGHTON AND MAIR
ARCHITECTS
THE TERRACE
WELLINGTON N Z

EDWARDS, CLENDON & PAR
CONSULTING ENGINEERS
48 HOBSON ST,
WELLINGTON

Revisions

THIS is one of the Drawings refe
AGREEMENT signed by us this
of - 1 OCT 1975 19

EMPLOYER
WITNESS
CONTRACTOR BOR CO.
WITNESS

Job No	Dwg No	Stage
1848	S.85	2

Job No	Dwg No	Stage
1848	S.86	2.

Notes

Do not scale Use figured dime
Report any discrepancy to th
architect before proceeding

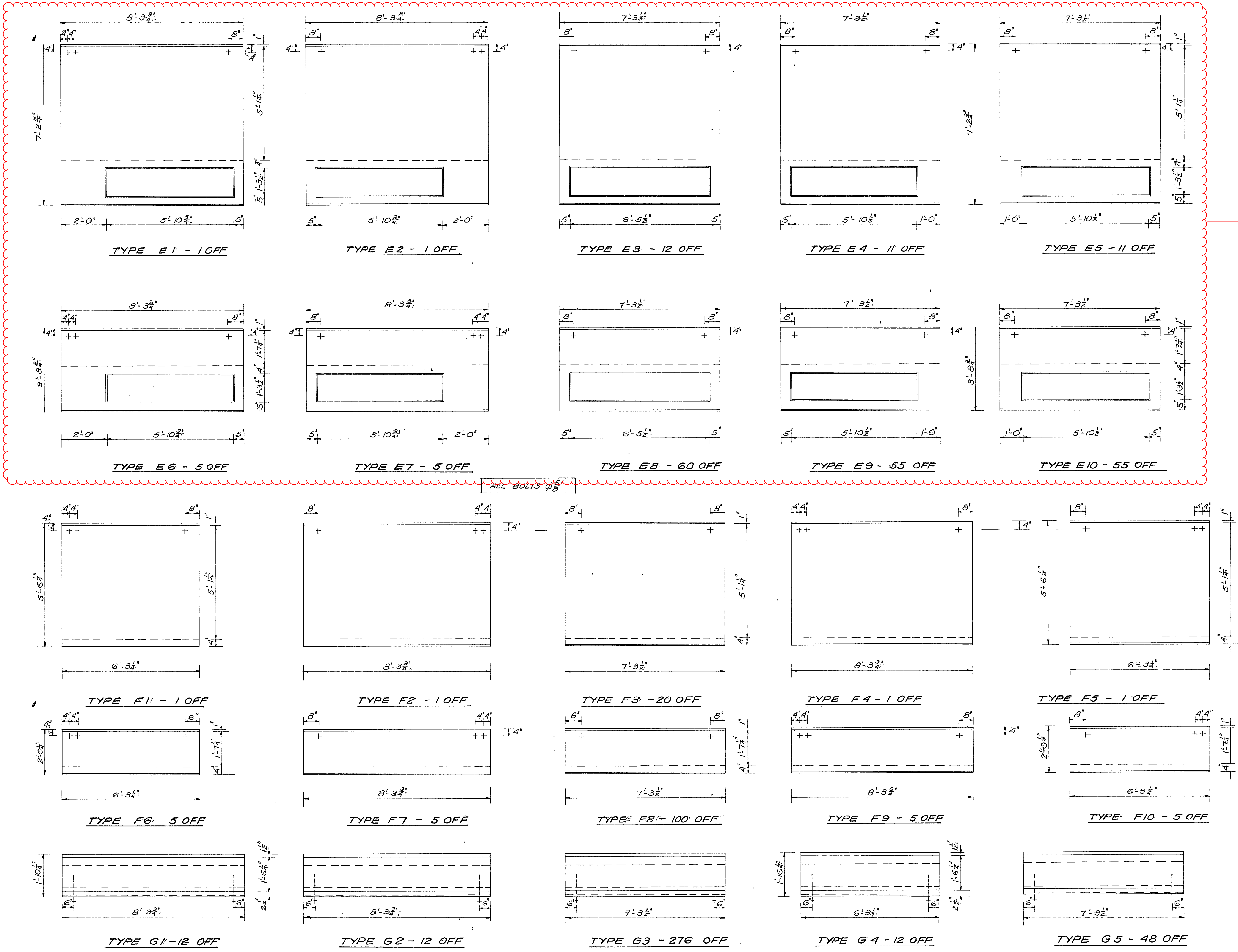

TYPE E NOT
CONSTRUCTED
- TYPE F USED

Job No	Dwg No	Stag
1848	S.86	2

ELEVATION OF
PRECAST PANEL
TYPES 'E', 'F' &
SHOWING BOLT POS

Designed E.K.C.	Traced
Drawn: R.B.B	Checked
Date JULY 1974	Scale $\frac{1}{2}$" =

WELLINGTON HOSP
BOARD
HUTT HOSPITAL
CLINICAL SERV
AND WARD BL

HAUGHTON AND MAIR
ARCHITECTS
THE TERRACE
WELLINGTON N Z

EDWARDS, CLENDON & PAR
CONSULTING ENGINEERS
48 HOBSON ST,
WELLINGTON.

Revisions

THIS is one of the Drawings ref
AGREEMENT signed by us this
of 21 OCT 1975 19

EMPLOYER

WITNESS DOWNER and CO

CONTRACTOR

WITNESS

Job No	Dwg No	Stag
1848	S.86	2

PRECAST PANEL DRAWINGS

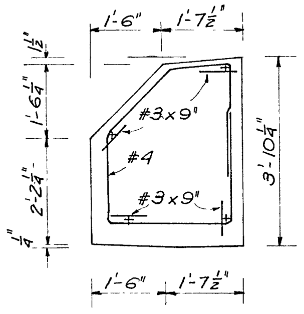

END PANELS - GRID 'F'
5 OFF THUS
5 OFF OPPOSITE HAND

665 H.R.C MESH NOT SHOWN ON ELEVATIONS

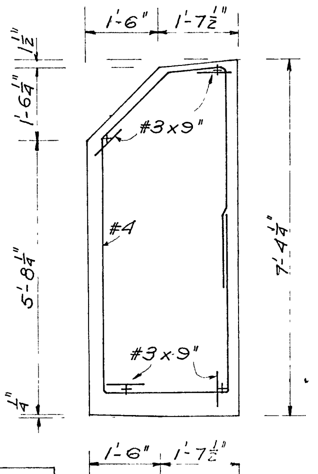

END PANELS AT 2ND FL - GRID 'F.'
1 OFF THUS
1 OFF OPPOSITE HAND

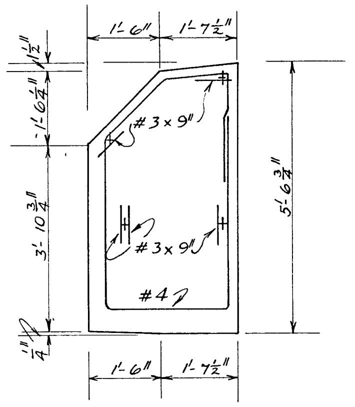

END PANELS ~ GRID 'C'
5 OFF THUS
5 OFF OPPOSITE HAND.

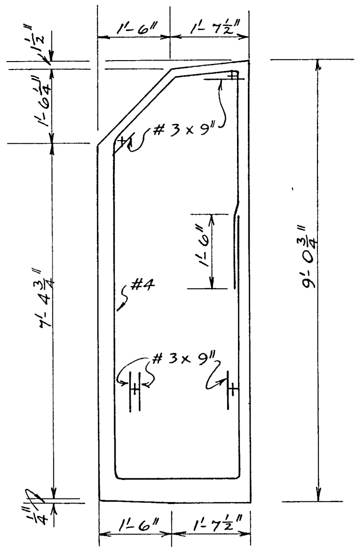

END PANELS AT 2ND FL ~ GRID 'C'
1 OFF THUS.
1 OFF OPPOSITE HAND

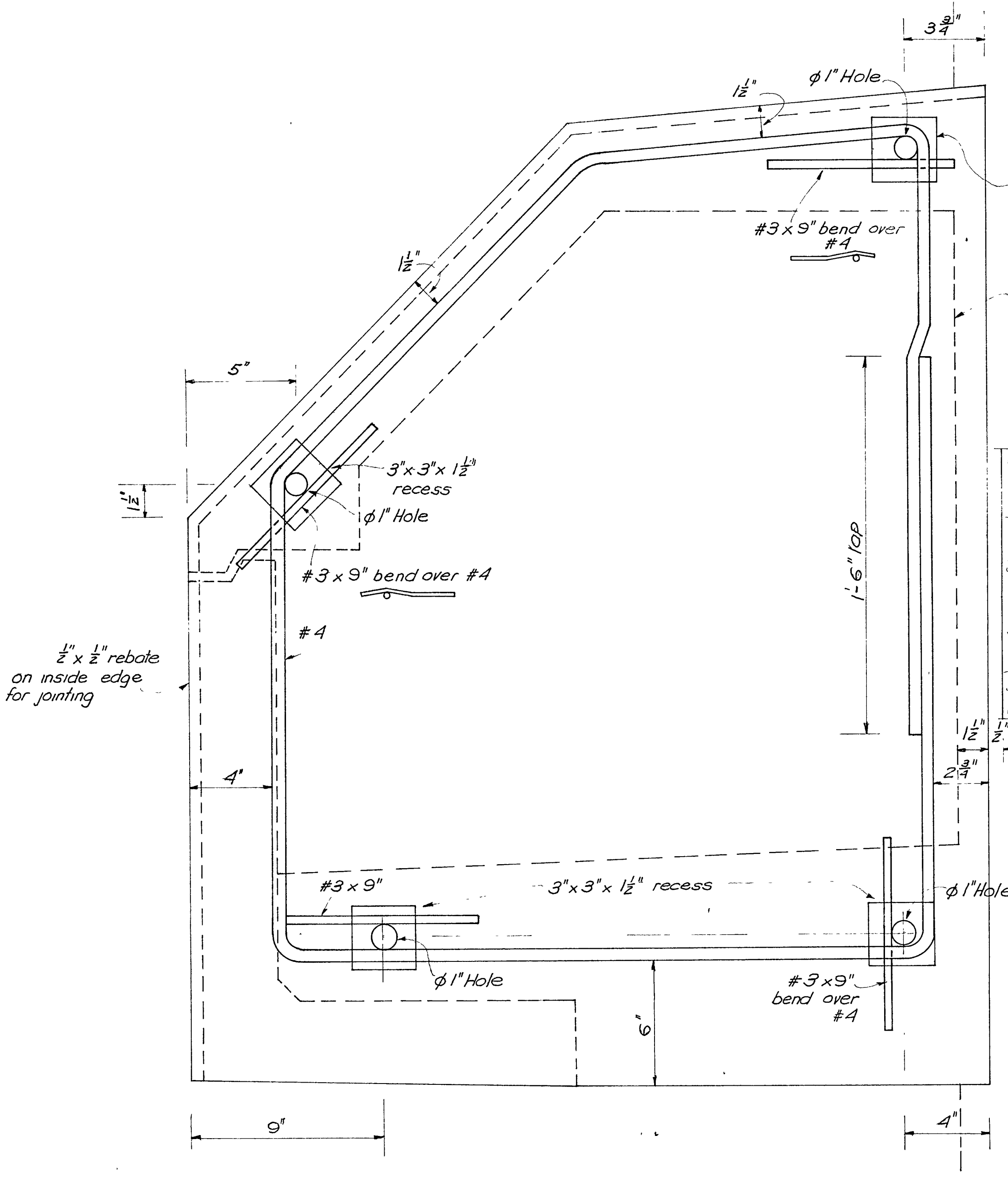

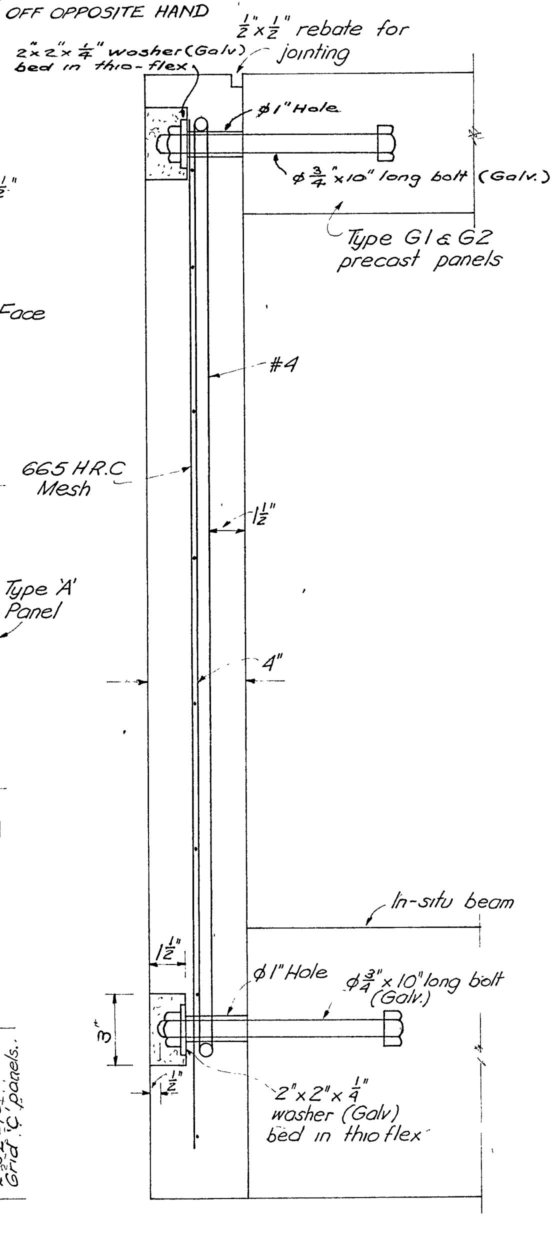

SECTION THRU END PANEL

NOTE: TEMPLATE TO BE TAKEN ON SITE BEFORE MAKING END PANELS

1848 | S87 | 2

Notes

Do not scale Use figured dimensions
Report any discrepancy to the
architect before proceeding

Job No	Dwg No	Stage	Re
1848	S.87	2	

DETAILS OF END
PANELS AT SPANDREL

Designed: EKC	Traced: MF
Drawn: R.B.B.	Checked: EKC
Date JULY 1974	Scale: ½" = 1'-0 ¼ Full Size

WELLINGTON HOSPITAL
BOARD
HUTT HOSPITAL
CLINICAL SERVICES
AND WARD BLOCK

HAUGHTON AND MAIR
ARCHITECTS
THE TERRACE
WELLINGTON N Z

EDWARDS, CLENDON & PARTNERS
CONSULTING ENGINEERS
48 HOBSON ST,
WELLINGTON

Revisions

THIS is one of the Drawings referred to
AGREEMENT signed by us this
of 1 OCT 1975 19

EMPLOYER
WITNESS
DOWNER and CO. LTD.
CONTRACTOR
WITNESS

Job No	Dwg No	Stage	Re
1848	S.87	2	

PRECAST PANEL DRAWINGS

Appendix B – Diaphragm Works

DIAPHRAGM STRENGTHENING ZONES

Ground Floor Plan

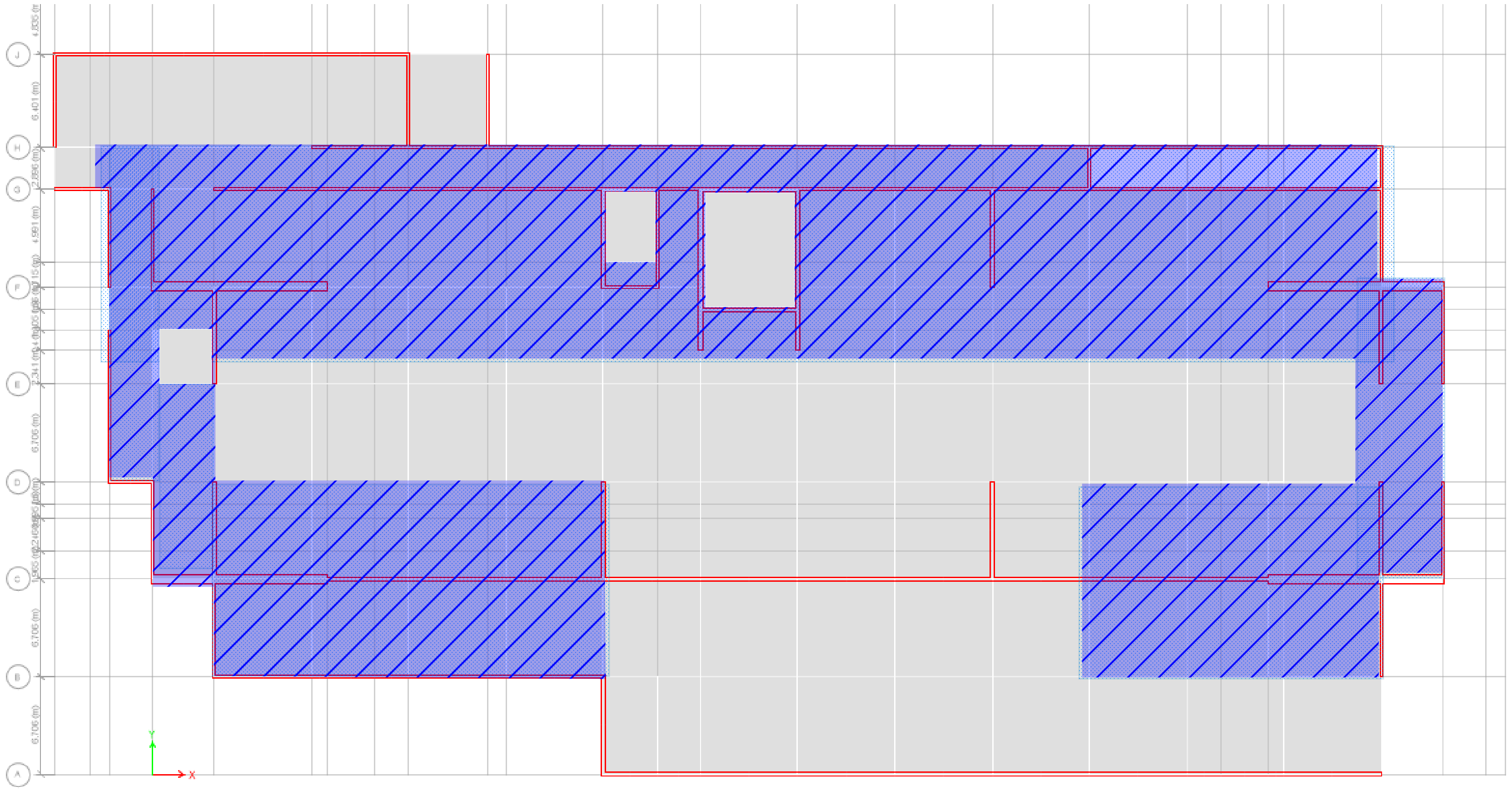

Blue hatched area needs strengthening.

Note:
it should be noted that these area are roughly sketched and it may shrink or expand when the ductility is introduced to the building by strengthening/weakening of the other elements and parts.

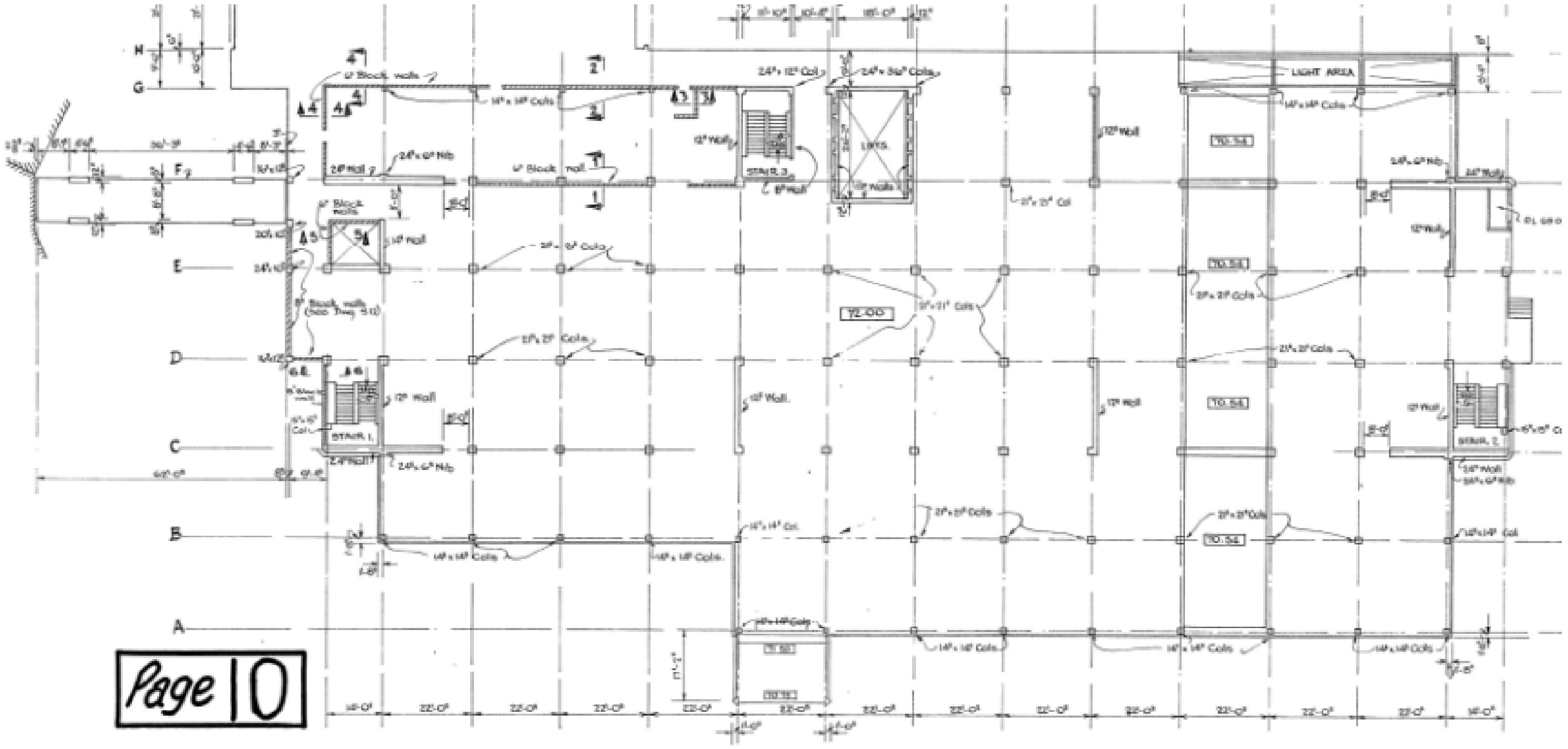

DIAPHRAGM STRENGTHENING ZONES

1st Floor Plan

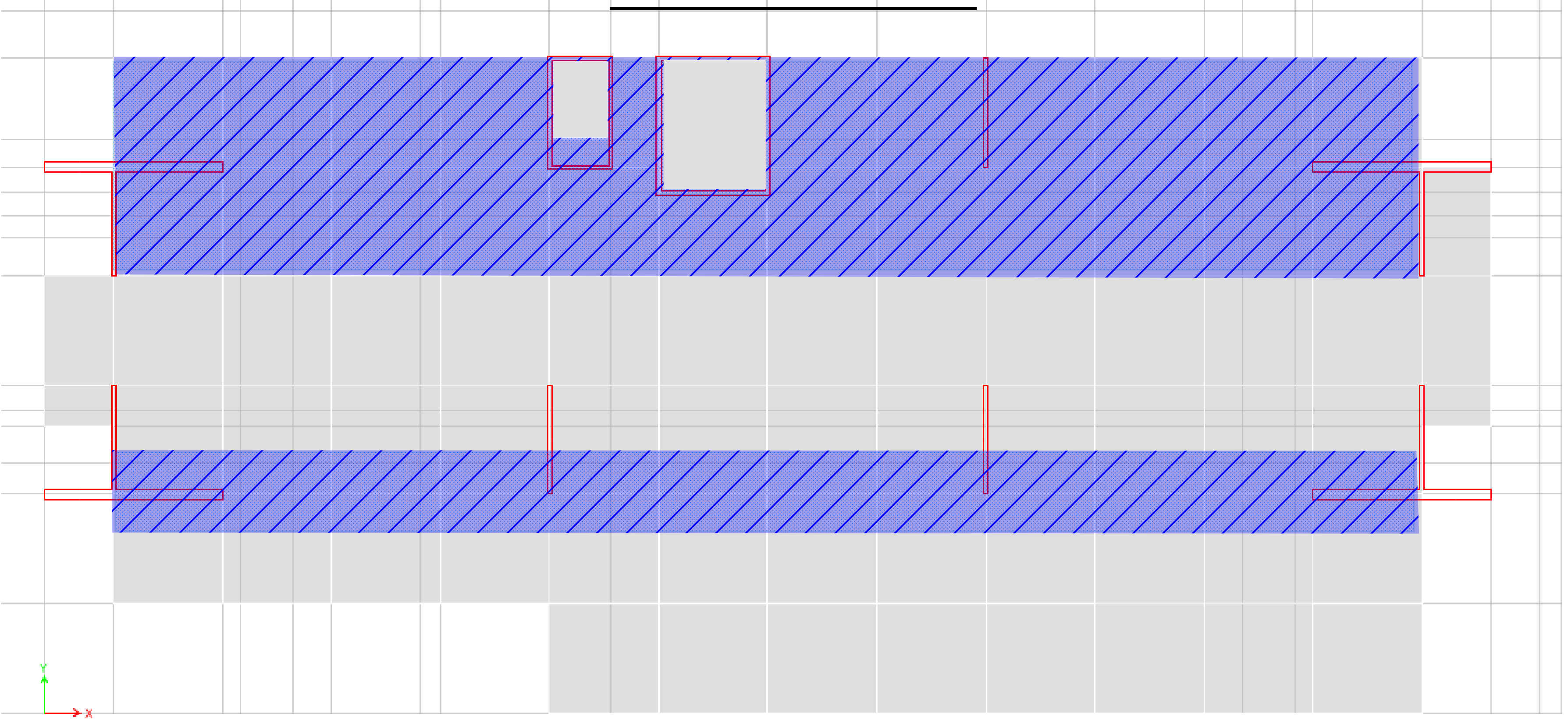

Blue Hatched area needs strengthening.

Note:
it should be noted that these area are roughly sketched and it may shrink or expand when the ductility is introduced to the building by strengthening/weakening of the other elements and parts.

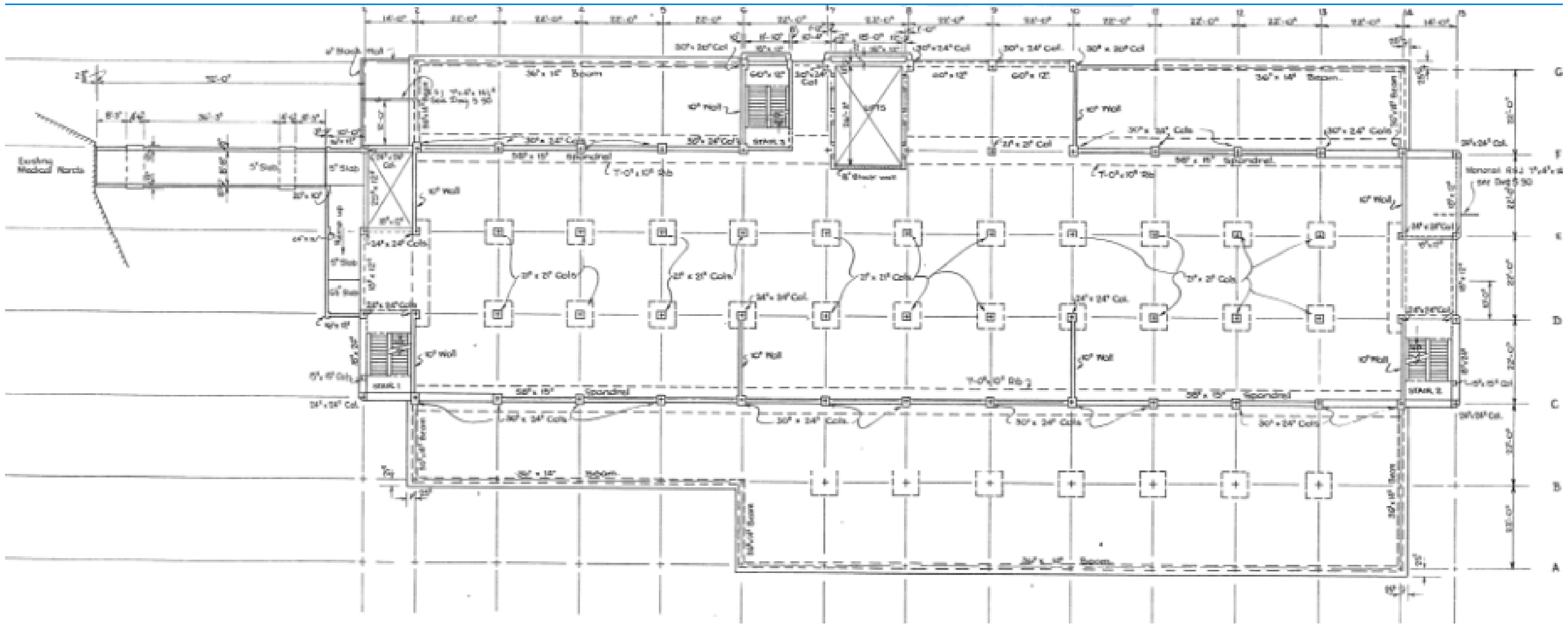

DIAPHRAGM STRENGTHENING ZONES

Roof Plan

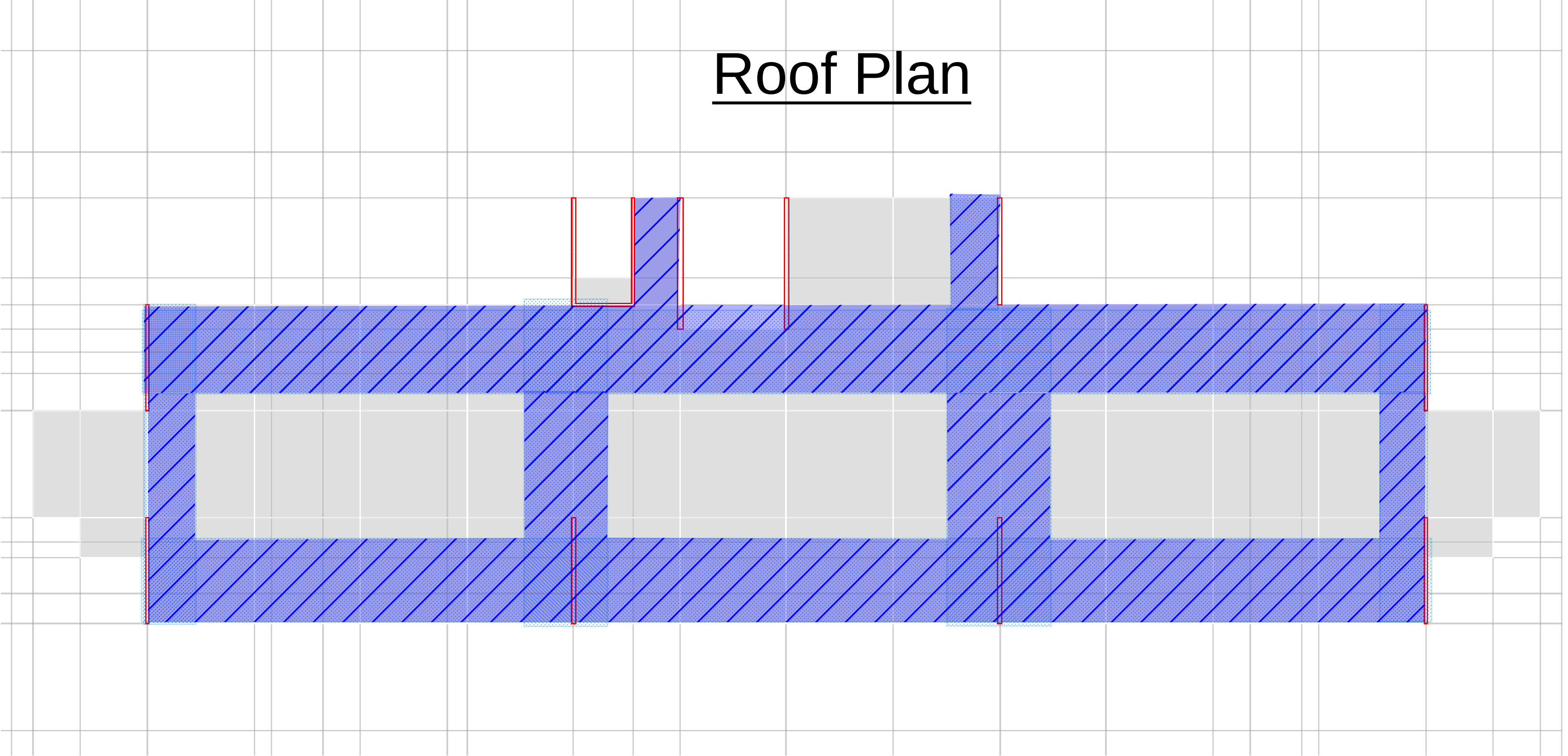

Blue hatched area needs strengthening.

Note:
it should be noted that these area are roughly sketched and it may shrink or expand when the ductility is introduced to the building by strengthening/weakening of the other elements and parts.

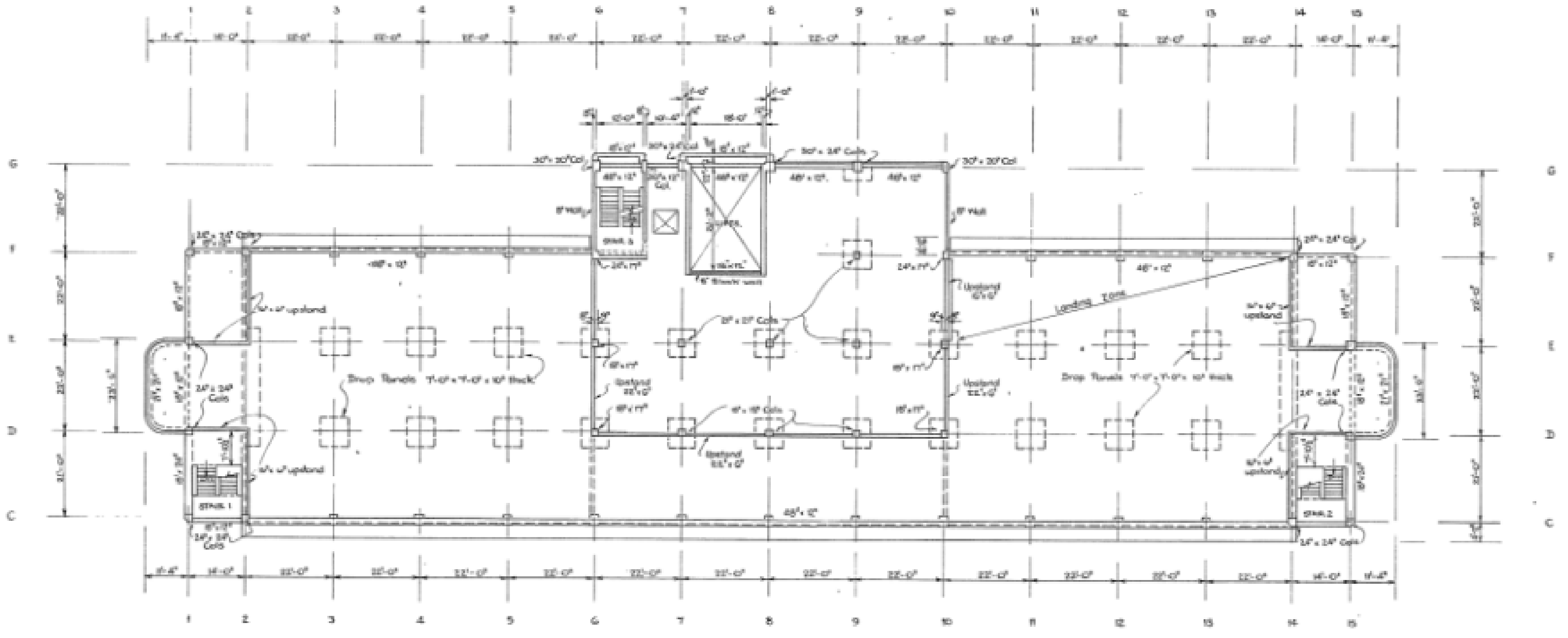

MAIN ROOF PLAN

Slab 9½" Thick.

Appendix C – RLB Cost Information

[NOT COMPLETE AT DRAFT ISSUE]

Document prepared by

Aurecon New Zealand Limited
Spark Central
Level 8, 42-52 Willis Street
Wellington 6011
PO Box 1591
Wellington 6140
New Zealand

T +64 4 472 9589
F +64 4 472 9922
E wellington@aurecongroup.com
W aurecongroup.com